K3G450-PA31-34

EC centrifugal module - RadiPac

backward-curved, single-intake

with support bracket

ebm-papst Mulfingen GmbH & Co. KGaA & Co. KG
Bachmühle 2 · D-74673 Mulfingen
Phone +49 7938 81-0
info1@de.fansco.com
www.fansco.com

Limited partnership · Headquarters Mulfingen
Amtsgericht (court of registration) Stuttgart · HRA 590344

General partner Elektrobau Mulfingen GmbH · Headquarters Mulfingen
Amtsgericht (court of registration) Stuttgart · HRB 590142

Nominal data

Type	**K3G450-PA31-34**
Motor	**M3G150-FF**

Phase		3~
Nominal voltage	VAC	400
Nominal voltage range	VAC	380 .. 480
Frequency	Hz	50/60
Method of obtaining data		ml
Speed (rpm)	min^{-1}	2480
Power consumption	W	4450
Current draw	A	6.8
Min. ambient temperature	°C	-40
Max. ambient temperature	°C	45

ml = Max. load · me = Max. efficiency · fa = Free air · cs = Customer specification · ce = Customer equipment
Subject to change

Data according to Commission Regulation (EU) 327/2011 (prEN 17166)

		Actual	Req. 2015
01 Overall efficiency η_{es}	%	69.3	58.3
02 Measurement category		A	
03 Efficiency category		Static	
04 Efficiency grade N		73	62
05 Variable speed drive		Yes	

09 Power consumption P_{ed}	kW	4.46
09 Air flow q_v	m³/h	8430
09 Pressure increase p_{fs}	Pa	1275
10 Speed (rpm) n	min^{-1}	2465
11 Specific ratio*		1.01

Data obtained at optimum efficiency level.

* Specific ratio = 1 + p_{fs} / 100 000 Pa

LU-205097

The efficiency values displayed for achieving conformity with the Ecodesign Regulation EU 327/2011 has been reached with defined air duct components (e.g. inlet rings).
The dimensions must be requested from ebm-papst. If other air conduction geometries are used on the installation side, the ebm-papst evaluation loses its validity/the conformity must be confirmed again.

The product does not fall within the scope of Regulation (EU) 2019/1781 due to the exception specified in Article 2 (2a) (motors completely integrated into a product).

EC centrifugal module - RadiPac

backward-curved, single-intake

with support bracket

Technical description

Weight	37 kg
Size	450 mm
Motor size	150
Rotor surface	Painted black
Electronics housing material	Die-cast aluminum, painted gray
Impeller material	Sheet aluminum, painted black
Support plate material	Sheet steel, galvanized and painted black
Support bracket material	Steel, painted black
Inlet nozzle material	Sheet steel, galvanized and painted black
Number of blades	5
Direction of rotation	Clockwise, viewed toward rotor
Degree of protection	IP55
Insulation class	"F"
Moisture (F) / Environmental (H) protection class	H2+S
Ambient temperature note	Occasional start-up at temperatures between -40°C and -25°C is permitted. For continuous operation at ambient temperatures below -25°C (such as refrigeration applications), use must be made of a fan design with special low-temperature bearings.
Max. permitted ambient temp. for motor (transport/storage)	+80 °C
Min. permitted ambient temp. for motor (transport/storage)	-40 °C
Installation position	See legend on product drawing
Condensation drainage holes	On rotor side
Mode	S1
Motor bearing	Ball bearing
Technical features	- Operation and alarm display with LED - External 15-50 VDC input (parameterization) - Alarm relay - Integrated PI controller - Configurable inputs/outputs (I/O) - MODBUS V6.3 - Motor current limitation - RS-485 MODBUS-RTU - Soft start - Voltage output 3.3-24 VDC, Pmax = 800 mW - Control interface with SELV potential safely disconnected from the mains - Thermal overload protection for electronics/motor - Line undervoltage / phase failure detection
Power Factor Correction (PFC)	Passive (through low-capacitance DC link)
EMC immunity to interference	According to EN 61000-6-2 (industrial environment)
EMC interference emission	According to EN 61000-6-3 (household environment), except EN 61000-3-2 for professionally used equipment with a total rated power greater than 1 kW
Touch current according to IEC 60990 (measuring circuit Fig. 4, TN system)	<= 3.5 mA
Electrical hookup	Terminal box
Motor protection	Reverse polarity and locked-rotor protection

ebm-papst Mulfingen GmbH & Co. KGaA & Co. KG · Bachmühle 2 · D-74673 Mulfingen · Phone +49 (0) 7938 81-0 ·sales@fansco.com · www.fansco.com

Protection class assignment	I; If a protective earth is connected. The built-in component has several local protection class assignments. The final protection class is determined by the intended installation.
Conformity with standards	EN 61800-5-1; CE; UKCA
Approval	CSA C22.2 No. 77 + CAN/CSA-E60730-1; EAC; UL 1004-7 + 60730-1

EC centrifugal module - RadiPac

backward-curved, single-intake

with support bracket

Product drawing

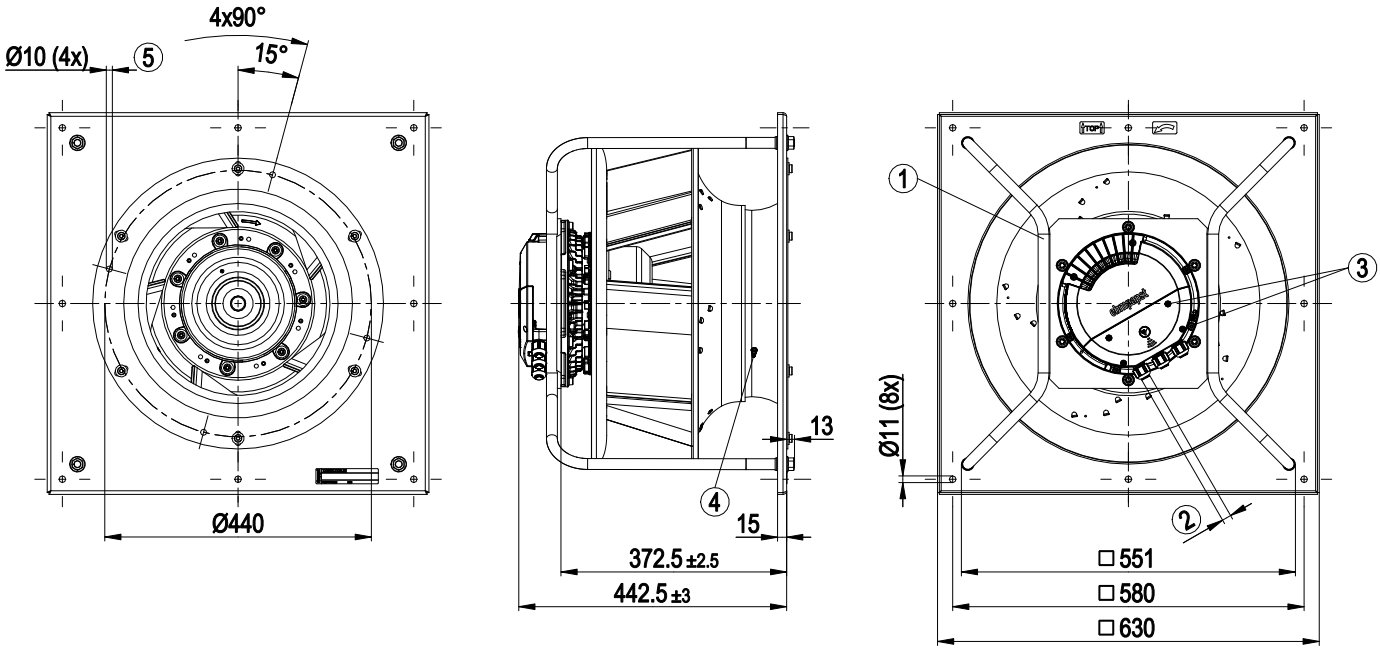

1	Installed position: shaft horizontal (install support struts only vertically as illustrated) or rotor on bottom; rotor on top on request
2	Cable diameter min. 4 mm, max. 10 mm, tightening torque 4 ± 0.6 Nm
	(The tightening torque is designed for PVC cables. If the cable materials are different, the tightening torque may have to be adjusted)
3	Tightening torque 1.5 ± 0.2 Nm
4	Inlet ring with pressure tap (k-factor: 240)
5	Attachment holes for FlowGrid 35505-2-2957 (not included in scope of delivery)

ebm-papst Mulfingen GmbH & Co. KGaA & Co. KG · Bachmühle 2 · D-74673 Mulfingen · Phone +49 (0) 7938 81-0 ·sales@fansco.com · www.fansco.com

EC centrifugal module - RadiPac

backward-curved, single-intake

with support bracket

Connection diagram

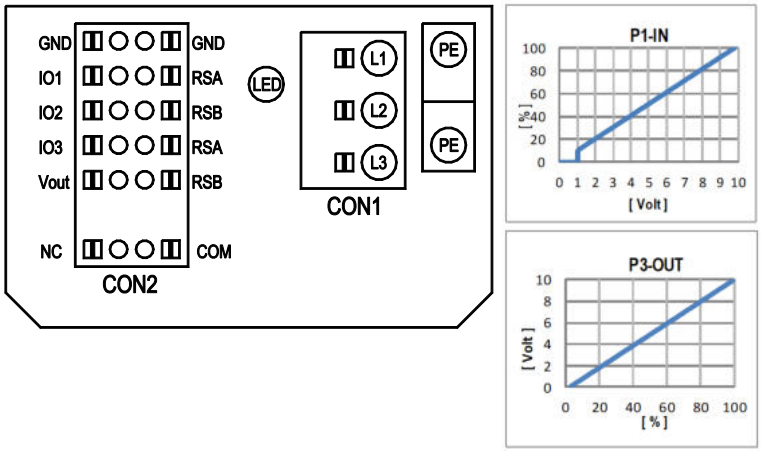

No.	Conn.	Designation	Function/assignment
	CON1	L1, L2, L3	Power supply, phase, see nameplate for voltage range
	PE	PE	Protective earth
	CON2	RSA	RS485 interface for MODBUS, RSA; SELV
	CON2	RSB	RS485 interface for MODBUS, RSB; SELV
	CON2	GND	Reference ground for control interface, SELV
	CON2	IO1	Function parameterizable (see “Optional interface functions” table) Factory setting: Digital input - high active, function: Disable input, SELV - inactive: Pin open or applied voltage < 1.5 VDC - active: applied voltage 3.5-50 VDC Reset function: Triggering of error reset on change of state from "enabled" to "disabled"
	CON2	IO2	Function parameterizable (see “Optional interface functions” table) Factory setting: Analog input 0-10 V / PWM, Ri=100 kΩ, function: Set value Characteristic curve parameterizable (see input characteristic curve P1-IN), SELV
	CON2	IO3	Function parameterizable (see “Optional interface functions” table) Factory setting: Analog output 0-10 V, max. 5 mA, function: Fan modulation level Characteristic curve parameterizable (see output characteristic curve P3-OUT), SELV
	CON2	Vout	Voltage output 3.3-24 VDC ±5%, Pmax=800 mW, voltage parameterizable Factory setting: 10 VDC short-circuit-proof, supply for external devices, SELV alternatively: 15-50 VDC input for parameterization via MODBUS without line voltage
	CON2	COM	Status relay, floating status contact, common connection, contact rating 250 VAC / 2 A (AC1) / min. 10 mA, reinforced insulation on supply side and on control interface side
	CON2	NC	Status relay, floating status contact, break for failure
		LED	green: status = good, ready for operation orange: status = warning red: status = failure
		P1-IN	Input characteristic curve
		P3-OUT	Output characteristic curve

ebm-papst Mulfingen GmbH & Co. KGaA & Co. KG · Bachmühle 2 · D-74673 Mulfingen · Phone +49 (0) 7938 81-0 ·sales@fansco.com · www.fansco.com

Terminal/plug assignment

○ configurable option

For further information and additional functions see EC Control Software, Fan-Set-App, or MODBUS Parameter Specification V6.3

CON2	configurable IO mode	electrical specification	MODBUS Register for IO mode configuration	configurable IO functions: normal / inverse	INPUT source: set value D101 [...]	INPUT source: sensor value D147 [...]	INPUT switch: parameter set: #1 / #2 D104 [...]	INPUT switch: control function: heating (pos.) / cooling (neg.) D12E [...]	INPUT switch: direction of rotation: cw / ccw D148 [...]	INPUT switch: set value source D16C [...]	INPUT switch: fan enable / disable D16A [...]	OUTPUT signal: tach out (selected directly via IO mode)	OUTPUT signal: diagnostics out (selected directly via IO mode)	OUTPUT signal: fan modulation level % D130 [0]	OUTPUT signal: actual speed D130 [1]	OUTPUT signal: system modulation level % D130 [2]	OUTPUT signal: remote control output 0-10V D130 [5]	OUTPUT pulse input for auto-adressing D00C [1]	OUTPUT pulse output for auto-adressing D130 [4]
IO1	○ **Din 1 (active high)**: digital input	active: applied voltage 3,5-50VDC, SELV not active: pin open or applied voltage < 1,5VDC	D158 [0]				○	○	○	○	○							○	
	○ **Ain 1 0-10V/PWM**: analog input	Ri = 100K, characteristic curve parameterizable, f_{PWM} = 1k..10KHz, SELV	D158 [2]			○													
	○ **Tach out** (open collector output)	Umax = 50VDC, Imax = 20mA, SELV	D158 [5]									○							
	○ **Diagnostics out** (open collector output)	Umax = 50VDC, Imax = 20mA, SELV	D158 [6]										○						
IO2	○ **Din 2 (active high)**: digital input	active: applied voltage 3,5-50VDC, SELV not active: pin open or applied voltage < 1,5VDC	D159 [0]				○	○	○	○	○								
	○ **Ain 2 0-10V/PWM**: analog input	Ri = 100K, characteristic curve parameterizable, f_{PWM} = 1k..10KHz, SELV	D159 [2]			○													
	○ **Ain 2 4-20mA**: analog input	Ri = 125R, characteristic curve parameterizable, SELV	D159 [3]																
IO3	○ **Din 3 (active high)**: digital input	active: applied voltage 3,5-50VDC, SELV not active: pin open or applied voltage < 1,5VDC	D15A [0]				○	○	○	○	○								
	○ **Din 3 (active low)**: digital input	active: applied voltage < 1,5VDC, SELV not active: pin open or applied voltage 3,5-50VDC	D15A [1]																
	○ **PWMin3**: digital input, idle level high	PWM = 40Hz- 10kHz, characteristics parameterizable active: pin open or applied voltage 3,5-50VDC not active: applied voltage < 1,5VDC, SELV	D15A [7]		○														
	○ **PWMin3**: digital input, idle level low	40Hz- 10kHz, characteristics parameterizable active: applied voltage 3,5-50VDC not active: pin open or applied voltage < 1,5VDC, SELV	D15A [8]		○														
	○ **Aout3 0-10V**: analog output	function parameterizable, max. 5mA, max output frequency 300Hz, SELV	D15A [4]											○	○	○	○		○
	○ **Tacho out** (pulses), analog output	0-10V max. 5mA, max output frequency 300Hz, SELV	D15A [5]									○							
	○ **Diagnostics out** (pulses)	0-10V max. 5mA, max output frequency 300Hz, SELV	D15A [6]										○						
RSA RSB	RS485 bus connection,	MODBUS RTU, specification V6.3, SELV			○						○								
Vout	voltage output	voltage parameterizable 3,3...24VDC +/- 5%, Pmax=800mW, short-circuit-proof, supply for external devices, SELV	D16E [...]																
	alternatively: Input auxiliary power supply for parameterization via RS485/MODBUS RTU without line voltage	15...50VDC																	

ebm-papst Mulfingen GmbH & Co. KGaA & Co. KG · Bachmühle 2 · D-74673 Mulfingen · Phone +49 (0) 7938 81-0 ·sales@fansco.com · www.fansco.com

EC centrifugal module - RadiPac

backward-curved, single-intake

with support bracket

Curves: Air performance 50 Hz

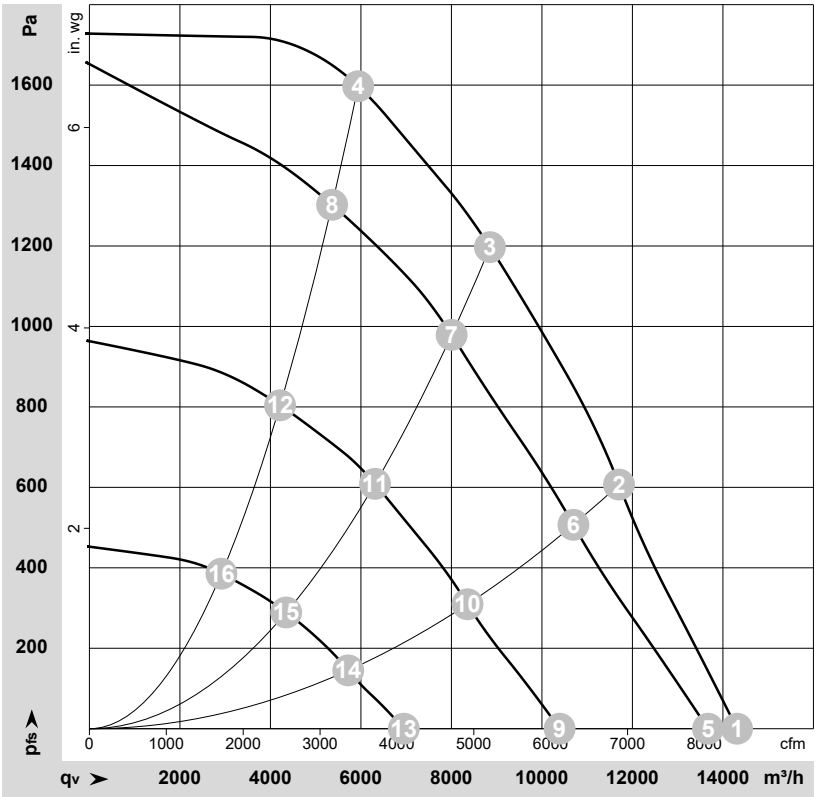

ρ = 1.15 kg/m³ ± 2 %

Measurement: LU-205097-1
Date: 2020-02-20
Nozzle: 45070-2-4013

Air performance measured according to ISO 5801 installation category A. For detailed information on the measurement setup, contact ebm-papst. Intake sound level: Sound power level according to ISO 13347 / sound pressure level measured at 1 m distance from fan axis. The values given are valid under the specified measuring conditions and may vary due to conditions of installation. For deviations from the standard configuration, the parameters have to be checked on the installed unit.

Measured values

	Wired	U	f	n	P_{ed}	I	LpA_{in}	LwA_{in}	LwA_{out}	q_V	p_{fs}	q_V	p_{fs}
		V	Hz	min^{-1}	W	A	dB(A)	dB(A)	dB(A)	m^3/h	Pa	cfm	in. wg
1	3~	400	50	2480	2775	4.26	91	99	99	14310	0	8425	0.00
2	3~	400	50	2480	3925	5.98	85	92	95	11705	600	6890	2.41
3	3~	400	50	2480	4450	6.80	78	85	91	8850	1200	5210	4.82
4	3~	400	50	2480	4413	6.71	82	89	94	5940	1600	3495	6.42
5	3~	400	50	2365	2421	3.74	90	97	98	13670	0	8045	0.00
6	3~	400	50	2260	2968	4.56	82	89	93	10695	507	6295	2.04
7	3~	400	50	2225	3286	5.03	75	83	89	8005	980	4710	3.93
8	3~	400	50	2230	3210	4.91	80	86	91	5365	1305	3155	5.24
9	3~	400	50	1815	1132	1.87	84	91	92	10390	0	6115	0.00
10	3~	400	50	1775	1451	2.33	76	83	87	8355	309	4920	1.24
11	3~	400	50	1755	1624	2.58	69	77	82	6310	609	3715	2.44
12	3~	400	50	1755	1574	2.50	72	80	85	4215	806	2480	3.24
13	3~	400	50	1240	422	0.92	73	81	84	6950	0	4090	0.00
14	3~	400	50	1220	518	1.05	66	73	77	5720	145	3365	0.58
15	3~	400	50	1215	578	1.14	60	68	73	4350	289	2560	1.16
16	3~	400	50	1215	567	1.12	62	70	75	2915	386	1715	1.55

Wired = Wiring · U = Voltage · f = Frequency · n = Speed (rpm) · P_{ed} = Power consumption · I = Current draw · LpA_{in} = Sound pressure level intake side · LwA_{in} = Sound power level intake side LwA_{out} = Sound power level outlet side · q_V = Air flow · p_{fs} = Pressure increase

ebm-papst Mulfingen GmbH & Co. KGaA & Co. KG · Bachmühle 2 · D-74673 Mulfingen · Phone +49 (0) 7938 81-0 ·sales@fansco.com · www.fansco.com