**K3G400-PA27-03**

# EC centrifugal module - RadiPac

backward-curved, single-intake

with support bracket

**ebm-papst Mulfingen GmbH & Co. KGaA & Co. KG**
Bachmühle 2 · D-74673 Mulfingen
Phone +49 7938 81-0
info1@de.fansco.com
www.fansco.com

Limited partnership · Headquarters Mulfingen
Amtsgericht (court of registration) Stuttgart · HRA 590344

General partner Elektrobau Mulfingen GmbH · Headquarters Mulfingen
Amtsgericht (court of registration) Stuttgart · HRB 590142

## Nominal data

| | |
|---|---|
| **Type** | **K3G400-PA27-03** |
| **Motor** | **M3G150-FF** |

| | | |
|---|---|---|
| Phase | | 3~ |
| Nominal voltage | VAC | 400 |
| Nominal voltage range | VAC | 380 .. 480 |
| Frequency | Hz | 50/60 |
| Method of obtaining data | | ml |
| Speed (rpm) | $min^{-1}$ | 2800 |
| Power consumption | W | 3650 |
| Current draw | A | 5.5 |
| Min. ambient temperature | °C | -40 |
| Max. ambient temperature | °C | 55 |

ml = Max. load · me = Max. efficiency · fa = Free air · cs = Customer specification · ce = Customer equipment
Subject to change

## Data according to Commission Regulation (EU) 327/2011 (prEN 17166)

| | | Actual | Req. 2015 |
|---|---|---|---|
| 01 Overall efficiency $\eta_{es}$ | % | 69.1 | 57.4 |
| 02 Measurement category | | A | |
| 03 Efficiency category | | Static | |
| 04 Efficiency grade N | | 73.7 | 62 |
| 05 Variable speed drive | | Yes | |

| | | |
|---|---|---|
| 09 Power consumption $P_{ed}$ | kW | 3.63 |
| 09 Air flow $q_v$ | m³/h | 6980 |
| 09 Pressure increase $p_{fs}$ | Pa | 1242 |
| 10 Speed (rpm) n | $min^{-1}$ | 2795 |
| 11 Specific ratio* | | 1.01 |

Data obtained at optimum efficiency level.

* Specific ratio = 1 + $p_{fs}$ / 100 000 Pa

LU-204601

The efficiency values displayed for achieving conformity with the Ecodesign Regulation EU 327/2011 has been reached with defined air duct components (e.g. inlet rings).
The dimensions must be requested from ebm-papst. If other air conduction geometries are used on the installation side, the ebm-papst evaluation loses its validity/the conformity must be confirmed again.

The product does not fall within the scope of Regulation (EU) 2019/1781 due to the exception specified in Article 2 (2a) (motors completely integrated into a product).

# EC centrifugal module - RadiPac

backward-curved, single-intake

with support bracket

## Technical description

| | |
|---|---|
| **Weight** | 30 kg |
| **Size** | 400 mm |
| **Motor size** | 150 |
| **Rotor surface** | Painted black |
| **Electronics housing material** | Die-cast aluminum |
| **Impeller material** | Sheet aluminum |
| **Support plate material** | Sheet steel, galvanized |
| **Support bracket material** | Steel, painted black |
| **Inlet nozzle material** | Sheet steel, galvanized |
| **Number of blades** | 5 |
| **Direction of rotation** | Clockwise, viewed toward rotor |
| **Degree of protection** | IP55 |
| **Insulation class** | "F" |
| **Moisture (F) / Environmental (H) protection class** | H1 |
| **Ambient temperature note** | Occasional start-up at temperatures between -40°C and -25°C is permitted. For continuous operation at ambient temperatures below -25°C (such as refrigeration applications), use must be made of a fan design with special low-temperature bearings. |
| **Max. permitted ambient temp. for motor (transport/storage)** | +80 °C |
| **Min. permitted ambient temp. for motor (transport/storage)** | -40 °C |
| **Installation position** | See legend on product drawing |
| **Condensation drainage holes** | On rotor side |
| **Mode** | S1 |
| **Motor bearing** | Ball bearing |
| **Technical features** | - Operation and alarm display with LED<br>- External 15-50 VDC input (parameterization)<br>- Alarm relay<br>- Integrated PI controller<br>- Configurable inputs/outputs (I/O)<br>- MODBUS V6.3<br>- Motor current limitation<br>- RS-485 MODBUS-RTU<br>- Soft start<br>- Voltage output 3.3-24 VDC, Pmax = 800 mW<br>- Control interface with SELV potential safely disconnected from the mains<br>- Thermal overload protection for electronics/motor<br>- Line undervoltage / phase failure detection |
| **Power Factor Correction (PFC)** | Passive (through low-capacitance DC link) |
| **EMC immunity to interference** | According to EN 61000-6-2 (industrial environment) |
| **EMC interference emission** | According to EN 61000-6-3 (household environment), except EN 61000-3-2 for professionally used equipment with a total rated power greater than 1 kW |
| **Touch current according to IEC 60990 (measuring circuit Fig. 4, TN system)** | <= 3.5 mA |
| **Electrical hookup** | Terminal box |



ebm-papst Mulfingen GmbH & Co. KGaA & Co. KG · Bachmühle 2 · D-74673 Mulfingen · Phone +49 (0) 7938 81-0 ·sales@fansco.com · www.fansco.com

| | |
|---|---|
| **Protection class assignment** | I; If a protective earth is connected.<br>The built-in component has several local protection class assignments.<br>The final protection class is determined by the intended installation. |
| **Conformity with standards** | EN 61800-5-1; CE; UKCA |
| **Approval** | CSA C22.2 No. 77 + CAN/CSA-E60730-1; EAC; UL 1004-7 + 60730-1 |



ebm-papst Mulfingen GmbH & Co. KGaA & Co. KG · Bachmühle 2 · D-74673 Mulfingen · Phone +49 (0) 7938 81-0 ·sales@fansco.com · www.fansco.com

# EC centrifugal module - RadiPac

backward-curved, single-intake

with support bracket

## Product drawing

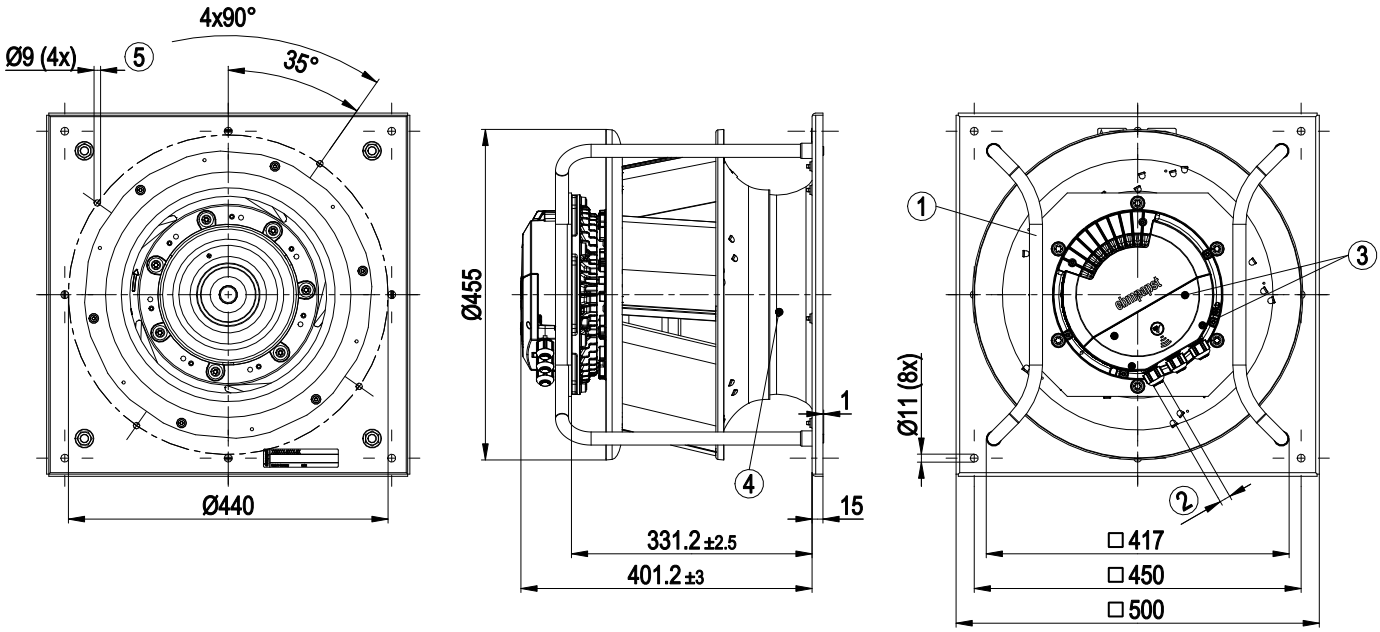


| | |
|---|---|
| 1 | Installed position: shaft horizontal (install support struts only vertically as illustrated) or rotor on bottom; rotor on top on request |
| 2 | Cable diameter min. 4 mm, max. 10 mm, tightening torque 4 ± 0.6 Nm |
| | (The tightening torque is designed for PVC cables. If the cable materials are different, the tightening torque may have to be adjusted) |
| 3 | Tightening torque 1.5 ± 0.2 Nm |
| 4 | Inlet ring with pressure tap (k-factor: 188) |
| 5 | Attachment holes for FlowGrid 35505-2-2957 (not included in scope of delivery) |



ebm-papst Mulfingen GmbH & Co. KGaA & Co. KG · Bachmühle 2 · D-74673 Mulfingen · Phone +49 (0) 7938 81-0 ·sales@fansco.com · www.fansco.com

# EC centrifugal module - RadiPac

backward-curved, single-intake

with support bracket

## Connection diagram

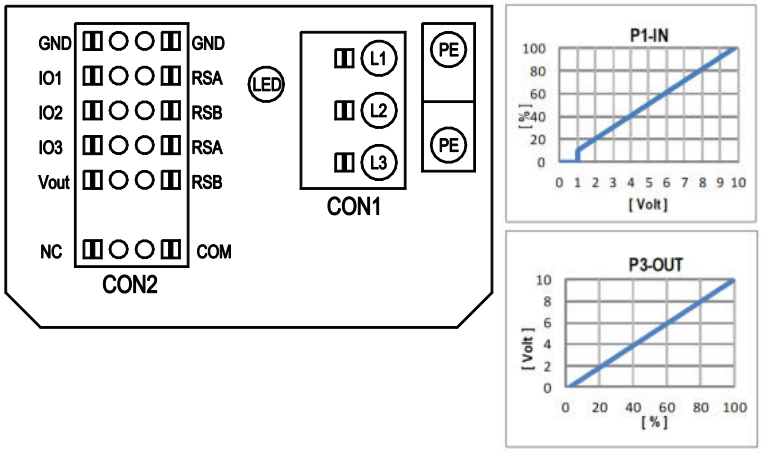


| No. | Conn. | Designation | Function/assignment |
|---|---|---|---|
| | CON1 | L1, L2, L3 | Power supply, phase, see nameplate for voltage range |
| | PE | PE | Protective earth |
| | CON2 | RSA | RS485 interface for MODBUS, RSA; SELV |
| | CON2 | RSB | RS485 interface for MODBUS, RSB; SELV |
| | CON2 | GND | Reference ground for control interface, SELV |
| | CON2 | IO1 | Function parameterizable (see “Optional interface functions” table)<br>Factory setting:<br>Digital input - high active, function: Disable input, SELV<br>- inactive: Pin open or applied voltage < 1.5 VDC<br>- active: applied voltage 3.5-50 VDC<br>Reset function: Triggering of error reset on change of state from "enabled" to "disabled" |
| | CON2 | IO2 | Function parameterizable (see “Optional interface functions” table)<br>Factory setting:<br>Analog input 0-10 V / PWM, Ri=100 kΩ, function: Set value<br>Characteristic curve parameterizable (see input characteristic curve P1-IN), SELV |
| | CON2 | IO3 | Function parameterizable (see “Optional interface functions” table)<br>Factory setting:<br>Analog output 0-10 V, max. 5 mA, function: Fan modulation level<br>Characteristic curve parameterizable (see output characteristic curve P3-OUT), SELV |
| | CON2 | Vout | Voltage output 3.3-24 VDC ±5%, Pmax=800 mW, voltage parameterizable<br>Factory setting: 10 VDC<br>short-circuit-proof, supply for external devices, SELV<br>alternatively: 15-50 VDC input for parameterization via MODBUS without line voltage |
| | CON2 | COM | Status relay, floating status contact, common connection, contact rating 250 VAC / 2 A (AC1) / min. 10 mA, reinforced insulation on supply side and on control interface side |
| | CON2 | NC | Status relay, floating status contact, break for failure |
| | | LED | green: status = good, ready for operation<br>orange: status = warning<br>red: status = failure |
| | | P1-IN | Input characteristic curve |
| | | P3-OUT | Output characteristic curve |



ebm-papst Mulfingen GmbH & Co. KGaA & Co. KG · Bachmühle 2 · D-74673 Mulfingen · Phone +49 (0) 7938 81-0 ·sales@fansco.com · www.fansco.com

## Terminal/plug assignment

○ configurable option

For further information and additional functions see EC Control Software, Fan-Set-App, or MODBUS Parameter Specification V6.3

| CON2 | configurable IO mode | electrical specification | MODBUS Register for IO mode configuration | configurable IO functions: normal / inverse | INPUT: source: set value D101 [...] | INPUT: source: sensor value D147 [...] | INPUT: switch: parameter set: #1 / #2 D104 [...] | INPUT: switch: control function: heating (pos.) / cooling (neg.) D12E [...] | INPUT: switch: direction of rotation: cw / ccw D148 [...] | INPUT: switch: set value source D16C [...] | INPUT: switch: fan enable / disable D16A [...] | OUTPUT: signal: tach out (selected directly via IO mode) | OUTPUT: signal: diagnostics out (selected directly via IO mode) | OUTPUT: signal: fan modulation level % D130 [0] | OUTPUT: signal: actual speed D130 [1] | OUTPUT: signal: system modulation level % D130 [2] | OUTPUT: signal: remote control output 0-10V D130 [5] | OUTPUT: pulse input for auto-adressing D00C [1] | OUTPUT: pulse output for auto-adressing D130 [4] |
|---|---|---|---|---|---|---|---|---|---|---|---|---|---|---|---|---|---|---|---|
| IO1 | ○ **Din 1 (active high)**: digital input | active: applied voltage 3,5-50VDC, SELV<br>not active: pin open or applied voltage < 1,5VDC | D158 [0] | | | | ○ | ○ | ○ | ○ | ○ | | | | | | | ○ | |
| | ○ **Ain 1 0-10V/PWM**: analog input | Ri = 100K, characteristic curve parameterizable, $f_{PWM}$ = 1k..10KHz, SELV | D158 [2] | | | ○ | | | | | | | | | | | | | |
| | ○ **Tach out** (open collector output) | Umax = 50VDC, Imax = 20mA, SELV | D158 [5] | | | | | | | | | ○ | | | | | | | |
| | ○ **Diagnostics out** (open collector output) | Umax = 50VDC, Imax = 20mA, SELV | D158 [6] | | | | | | | | | | ○ | | | | | | |
| IO2 | ○ **Din 2 (active high)**: digital input | active: applied voltage 3,5-50VDC, SELV<br>not active: pin open or applied voltage < 1,5VDC | D159 [0] | | | | ○ | ○ | ○ | ○ | ○ | | | | | | | | |
| | ○ **Ain 2 0-10V/PWM**: analog input | Ri = 100K, characteristic curve parameterizable, $f_{PWM}$ = 1k..10KHz, SELV | D159 [2] | | | ○ | | | | | | | | | | | | | |
| | ○ **Ain 2 4-20mA**: analog input | Ri = 125R, characteristic curve parameterizable, SELV | D159 [3] | | | | | | | | | | | | | | | | |
| IO3 | ○ **Din 3 (active high)**: digital input | active: applied voltage 3,5-50VDC, SELV<br>not active: pin open or applied voltage < 1,5VDC | D15A [0] | | | | ○ | ○ | ○ | ○ | ○ | | | | | | | | |
| | ○ **Din 3 (active low)**: digital input | active: applied voltage < 1,5VDC, SELV<br>not active: pin open or applied voltage 3,5-50VDC | D15A [1] | | | | | | | | | | | | | | | | |
| | ○ **PWMin3**: digital input, idle level high | PWM = 40Hz- 10kHz, characteristics parameterizable<br>active: pin open or applied voltage 3,5-50VDC<br>not active: applied voltage < 1,5VDC, SELV | D15A [7] | | ○ | | | | | | | | | | | | | | |
| | ○ **PWMin3**: digital input, idle level low | 40Hz- 10kHz, characteristics parameterizable<br>active: applied voltage 3,5-50VDC<br>not active: pin open or applied voltage < 1,5VDC, SELV | D15A [8] | | ○ | | | | | | | | | | | | | | |
| | ○ **Aout3 0-10V**: analog output | function parameterizable, max. 5mA, max output frequency 300Hz, SELV | D15A [4] | | | | | | | | | | | ○ | ○ | ○ | ○ | | ○ |
| | ○ **Tacho out** (pulses), analog output | 0-10V max. 5mA, max output frequency 300Hz, SELV | D15A [5] | | | | | | | | | ○ | | | | | | | |
| | ○ **Diagnostics out** (pulses) | 0-10V max. 5mA, max output frequency 300Hz, SELV | D15A [6] | | | | | | | | | | ○ | | | | | | |
| RSA<br>RSB | RS485 bus connection, | MODBUS RTU, specification V6.3, SELV | | | ○ | | | | | | ○ | | | | | | | | |
| Vout | voltage output | voltage parameterizable 3,3...24VDC +/- 5%, Pmax=800mW, short-circuit-proof, supply for external devices, SELV | D16E [...] | | | | | | | | | | | | | | | | |
| | alternatively: Input auxiliary power supply for parameterization via RS485/MODBUS RTU without line voltage | 15...50VDC | | | | | | | | | | | | | | | | | |



ebm-papst Mulfingen GmbH & Co. KGaA & Co. KG · Bachmühle 2 · D-74673 Mulfingen · Phone +49 (0) 7938 81-0 ·sales@fansco.com · www.fansco.com

# EC centrifugal module - RadiPac

backward-curved, single-intake

with support bracket

## Curves: Air performance 50 Hz

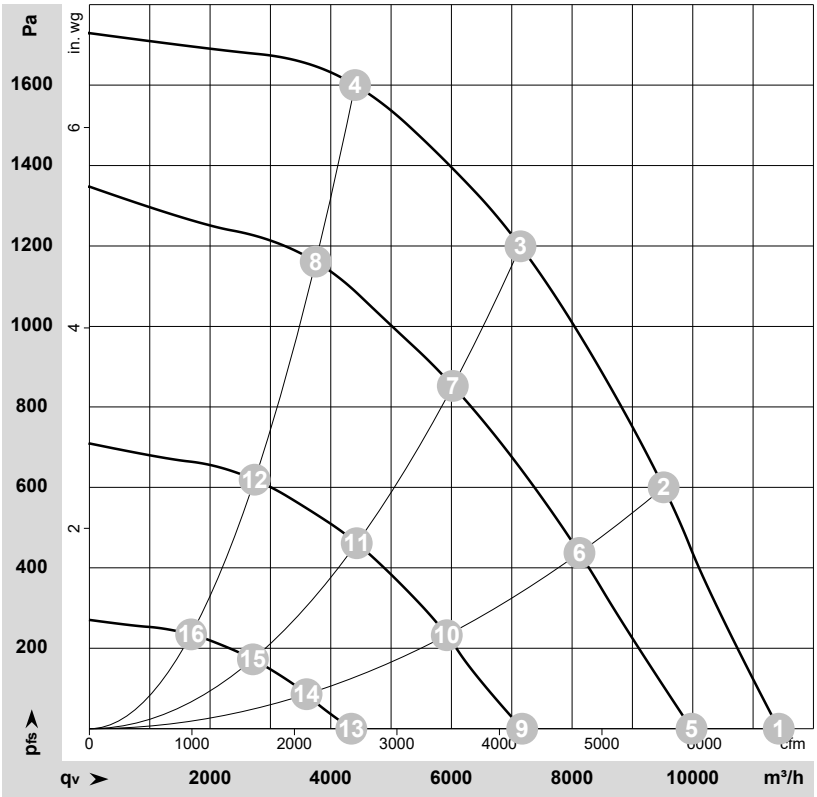


ρ = 1.15 kg/m³ ± 2 %

Measurement: LU-204601-1
Date: 2020-02-21
Nozzle: 40070-2-4013

Air performance measured according to ISO 5801 installation category A. For detailed information on the measurement setup, contact ebm-papst. Intake sound level: Sound power level according to ISO 13347 / sound pressure level measured at 1 m distance from fan axis. The values given are valid under the specified measuring conditions and may vary due to conditions of installation. For deviations from the standard configuration, the parameters have to be checked on the installed unit.

## Measured values

| | Wired | U | f | n | $P_{ed}$ | I | $LpA_{in}$ | $LwA_{in}$ | $LwA_{out}$ | $q_V$ | $p_{fs}$ | $q_V$ | $p_{fs}$ |
|---|---|---|---|---|---|---|---|---|---|---|---|---|---|
| | | V | Hz | $min^{-1}$ | W | A | dB(A) | dB(A) | dB(A) | $m^3/h$ | Pa | cfm | in. wg |
| 1 | 3~ | 400 | 50 | 2800 | 2291 | 3.54 | 91 | 98 | 100 | 11425 | 0 | 6725 | 0.00 |
| 2 | 3~ | 400 | 50 | 2800 | 3219 | 4.92 | 83 | 91 | 96 | 9520 | 600 | 5600 | 2.41 |
| 3 | 3~ | 400 | 50 | 2800 | 3650 | 5.50 | 78 | 86 | 93 | 7145 | 1200 | 4205 | 4.82 |
| 4 | 3~ | 400 | 50 | 2800 | 3429 | 5.23 | 82 | 89 | 95 | 4405 | 1600 | 2590 | 6.42 |
| 5 | 3~ | 400 | 50 | 2455 | 1579 | 2.51 | 87 | 94 | 96 | 9980 | 0 | 5875 | 0.00 |
| 6 | 3~ | 400 | 50 | 2375 | 2009 | 3.13 | 79 | 87 | 91 | 8120 | 441 | 4780 | 1.77 |
| 7 | 3~ | 400 | 50 | 2360 | 2200 | 3.42 | 73 | 81 | 88 | 6025 | 855 | 3545 | 3.43 |
| 8 | 3~ | 400 | 50 | 2380 | 2133 | 3.32 | 77 | 84 | 89 | 3750 | 1163 | 2210 | 4.67 |
| 9 | 3~ | 400 | 50 | 1770 | 665 | 1.24 | 78 | 85 | 88 | 7175 | 0 | 4220 | 0.00 |
| 10 | 3~ | 400 | 50 | 1745 | 846 | 1.48 | 70 | 78 | 83 | 5925 | 236 | 3485 | 0.95 |
| 11 | 3~ | 400 | 50 | 1735 | 931 | 1.59 | 65 | 73 | 80 | 4430 | 463 | 2610 | 1.86 |
| 12 | 3~ | 400 | 50 | 1740 | 891 | 1.54 | 68 | 75 | 81 | 2740 | 620 | 1610 | 2.49 |
| 13 | 3~ | 400 | 50 | 1090 | 199 | 0.56 | 65 | 73 | 75 | 4340 | 0 | 2555 | 0.00 |
| 14 | 3~ | 400 | 50 | 1075 | 237 | 0.62 | 58 | 66 | 72 | 3600 | 87 | 2120 | 0.35 |
| 15 | 3~ | 400 | 50 | 1070 | 256 | 0.66 | 54 | 62 | 68 | 2710 | 173 | 1595 | 0.69 |
| 16 | 3~ | 400 | 50 | 1070 | 248 | 0.64 | 55 | 62 | 69 | 1685 | 235 | 990 | 0.94 |

Wired = Wiring · U = Voltage · f = Frequency · n = Speed (rpm) · $P_{ed}$ = Power consumption · I = Current draw · $LpA_{in}$ = Sound pressure level intake side · $LwA_{in}$ = Sound power level intake side $LwA_{out}$ = Sound power level outlet side · $q_V$ = Air flow · $p_{fs}$ = Pressure increase



ebm-papst Mulfingen GmbH & Co. KGaA & Co. KG · Bachmühle 2 · D-74673 Mulfingen · Phone +49 (0) 7938 81-0 ·sales@fansco.com · www.fansco.com