8300101611

VVY0630NSPLS

EC axial panel fan - AxiTone

sickle-shaped blades (S series)

ebm-papst Mulfingen GmbH & Co. KG
Bachmühle 2 · D-74673 Mulfingen
Phone +49 7938 81-0
Fax +49 7938 81-110
info1@de.fansco.com
www.fansco.com

Limited partnership · Headquarters Mulfingen
Amtsgericht (court of registration) Stuttgart · HRA 590344

General partner Elektrobau Mulfingen GmbH · Headquarters Mulfingen
Amtsgericht (court of registration) Stuttgart · HRB 590142

Nominal data

Item	**8300101611**
Motor	**E09001-55**

Phase		1~
Nominal voltage	VAC	230
Nominal voltage range	VAC	200 .. 240
Frequency	Hz	50/60
Method of obtaining data		ml
Status		prelim.
Speed (rpm)	min^{-1}	760
Power consumption	W	340
Current draw	A	2.1
Max. back pressure	Pa	78
Max. back pressure	in. wg	0.31
Min. ambient temperature	°C	-25
Max. ambient temperature	°C	60

ml = Max. load · me = Max. efficiency · fa = Free air · cs = Customer specification · ce = Customer equipment
Subject to change

Data according to Commission Regulation (EU) 327/2011 (prEN 17166)

		Actual	Req. 2015
01 Overall efficiency η_{es}	%	42	30.6
02 Measurement category		A	
03 Efficiency category		Static	
04 Efficiency grade N		51.4	40
05 Variable speed drive		Yes	

09 Power consumption P_{ed}	kW	0.33
09 Air flow q_v	m³/h	6070
09 Pressure increase p_{fs}	Pa	74
10 Speed (rpm) n	min^{-1}	760
11 Specific ratio*		1.00

Data obtained at optimum efficiency level.

* Specific ratio = 1 + p_{fs} / 100 000 Pa

LU-234924

The efficiency values displayed for achieving conformity with the Ecodesign Regulation EU 327/2011 has been reached with defined air duct components (e.g. inlet rings).
The dimensions must be requested from ebm-papst. If other air conduction geometries are used on the installation side, the ebm-papst evaluation loses its validity/the conformity must be confirmed again.

The product does not fall within the scope of Regulation (EU) 2019/1781 due to the exception specified in Article 2 (2a) (motors completely integrated into a product).

EC axial panel fan - AxiTone

sickle-shaped blades (S series)

Technical description

Size	630 mm
Motor size	90
Rotor surface	Painted black
Electronics housing material	Die-cast aluminum, painted gray
Impeller material	PP plastic
Number of blades	3
Airflow direction	V
Direction of rotation	Clockwise, viewed toward rotor
Degree of protection	IP55
Insulation class	"F"
Moisture (F) / Environmental (H) protection class	H2
Ambient temperature note	Occasional start-up at temperatures between -40°C and -25°C is permitted. For continuous operation at ambient temperatures below -25°C (such as refrigeration applications), use must be made of a fan design with special low-temperature bearings.
Max. permitted ambient temp. for motor (transport/storage)	+80 °C
Min. permitted ambient temp. for motor (transport/storage)	-40 °C
Installation position	Shaft horizontal or rotor on bottom; rotor on top on request
Condensation drainage holes	On rotor side
Mode	S1
Motor bearing	Ball bearing; (sealed)
Technical features	- Locked-rotor detection - Speed control - Alarm relay - Power limiter - Motor current limitation - PFC, passive - Soft start - Control interface with SELV potential safely disconnected from the mains - Temperature derating - Thermal overload protection for electronics/motor - Line undervoltage / phase failure detection
Touch current according to IEC 60990 (measuring circuit Fig. 4, TN system)	<= 3.5 mA
Motor protection	Electronic motor protection
With cable	Lateral
Protection class assignment	I; If a protective earth is connected. The built-in component has several local protection class assignments. The final protection class is determined by the intended installation.
Conformity with standards	EN 60335-1; EN 61800-5-1; CE; UKCA
Approval	UL 1004-7 + 60730-1; CSA C22.2 No. 77 + CAN/CSA-E60730-1

ebm-papst Mulfingen GmbH & Co. KG · Bachmühle 2 · D-74673 Mulfingen · Phone +49 (0) 7938 81-0 · Fax +49 (0) 7938 81-110 · info1@de.fansco.com · www.fansco.com

EC axial panel fan - AxiTone

sickle-shaped blades (S series)

Product drawing

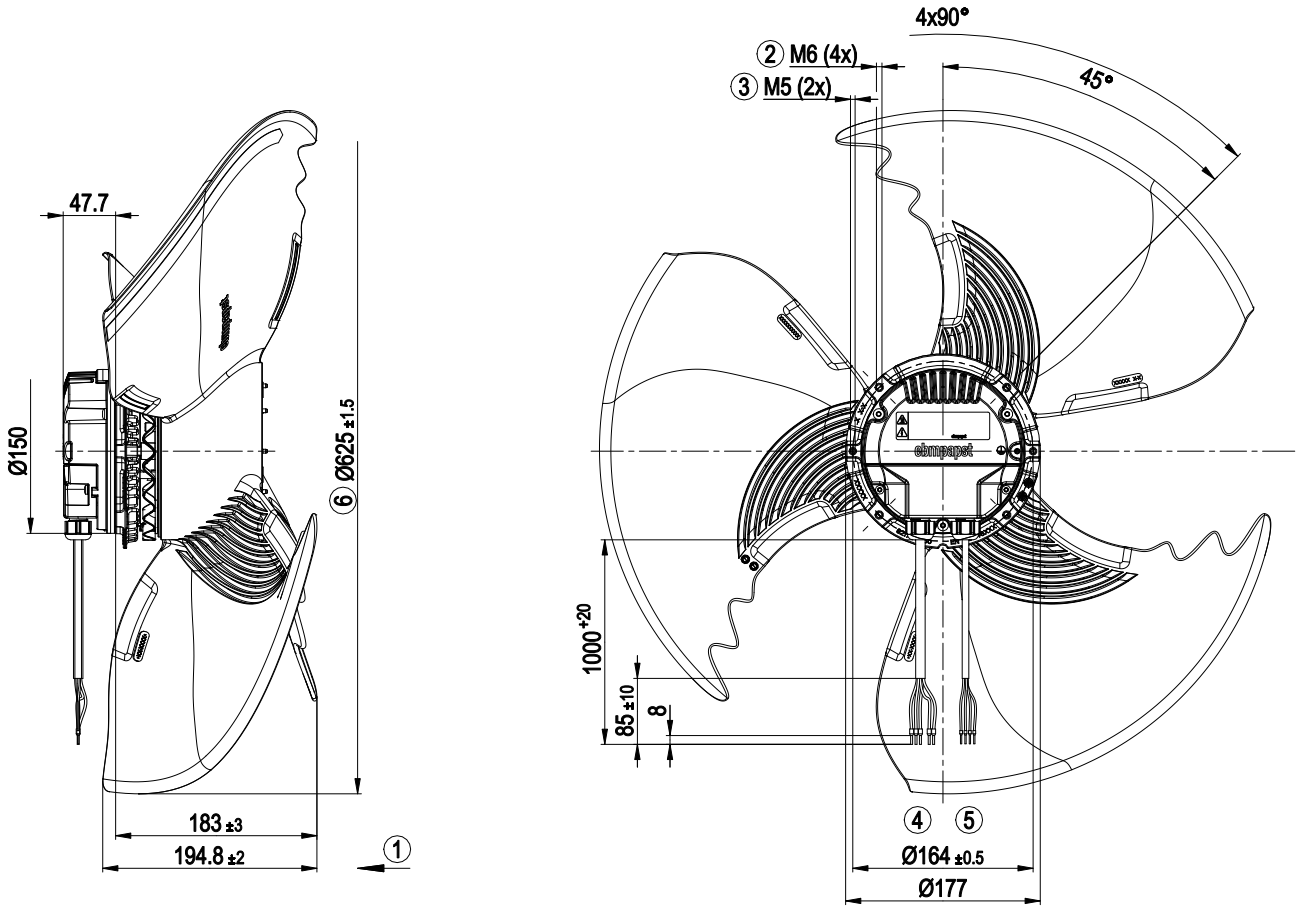

1	Airflow direction "V"
2	Max. clearance for screw 10 mm
3	Max. clearance for screw 10 mm
	The tapped holes can be used to attach hoisting equipment.
4	Supply line (PWR) PVC AWG18
	5x wire-end ferrule
5	Control wire (CTRL) PVC AWG22
	4x wire-end ferrule
6	The diameter of the impeller becomes larger than indicated on the drawing due to the centrifugal forces during operation. The dimension indicated refers to the condition on delivery.

ebm-papst Mulfingen GmbH & Co. KG · Bachmühle 2 · D-74673 Mulfingen · Phone +49 (0) 7938 81-0 · Fax +49 (0) 7938 81-110 · info1@de.fansco.com · www.fansco.com

Connection diagram

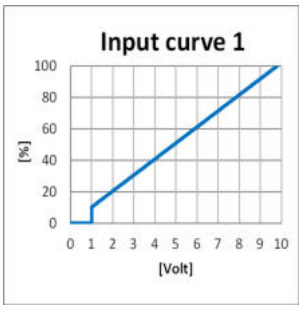

No.	Conn.	Designation	Color	Function/assignment
	PWR	PE	green/yellow	Protective earth
	PWR	L	black	Power supply, phase, see nameplate for voltage range
	PWR	N	blue	Power supply, neutral conductor, see nameplate for voltage range
	PWR	COM	orange	Status relay, floating status contact, common connection, contact rating 250 VAC / 2 A (AC1) / min. 10 mA, reinforced insulation on supply side and on control interface side
	PWR	NC	orange	Status relay, floating status contact, break for failure
	CTRL	GND	blue	Reference ground for control interface, SELV
	CTRL	Vout	red	Voltage output 10 VDC +/-3%, Imax=10 mA Short-circuit-proof, power supply for external devices, SELV
	CTRL	IO1	yellow	Factory setting: Analog input 0-10 V / PWM, Ri=100 kΩ, function: set value Characteristic curve parameterizable (see input characteristic curve "Input curve 1"), SELV Function parameterizable at the factory (see table Optional interface functions)
	CTRL	IO2	white	Factory setting: Open collector output, Umax=50 VDC, Imax=20 mA, function:Tacho output 1 pulse/revolution, SELV Function parameterizable at factory (see table Optional interface functions)

ebm-papst Mulfingen GmbH & Co. KG · Bachmühle 2 · D-74673 Mulfingen · Phone +49 (0) 7938 81-0 · Fax +49 (0) 7938 81-110 · info1@de.fansco.com · www.fansco.com

Terminal/plug assignment

Basic (B5)

Factory configuration option upon request

○ *factory configuration option*

	configurable IO mode	electrical specification	INPUT					OUTPUT				
			source: set value	switch: parameter set: #1 / #2	switch: direction of rotation: cw / ccw	switch: enable/disable input	configurable function	signal: tach out	signal: diagnostics out	signal: alarm out	signal: run monitoring	signal: status	signal: configurable function
IO1	○ **Din1 (high active):** digital input	active: parametrizable voltage x - 30 VDC not active: pin open or parametrizable voltage < x VDC, SELV		○	○	○							
	○ **Ain1 0-10 V/PWM:** analog input	Ri = 100 kΩ, characteristic curve parameterizable, f_{PWM} = 1 k - 10 kHz, SELV	○				○						
IO2	○ **Tach out** (open collector)	Umax = 50 VDC, Imax = 20 mA, SELV						○					
	○ **Diagnostics out** (open collector)	Umax = 50 VDC, Imax = 20 mA, SELV							○				
	○ **Alarm out** (open collector)	Umax = 50 VDC, Imax = 20 mA, SELV								○			
	○ **Open collector**	Umax = 50 VDC, Imax = 20 mA, SELV											○
COM NC	**Relais**	250 VAC / 2 A (AC1)									○	○	○
Vout	**Voltage output**	Voltage 10 VDC, SELV											

ebm-papst Mulfingen GmbH & Co. KG · Bachmühle 2 · D-74673 Mulfingen · Phone +49 (0) 7938 81-0 · Fax +49 (0) 7938 81-110 · info1@de.fansco.com · www.fansco.com

8300101611

VVY0630NSPLS

EC axial panel fan - AxiTone

sickle-shaped blades (S series)

Curves: Air performance 50 Hz

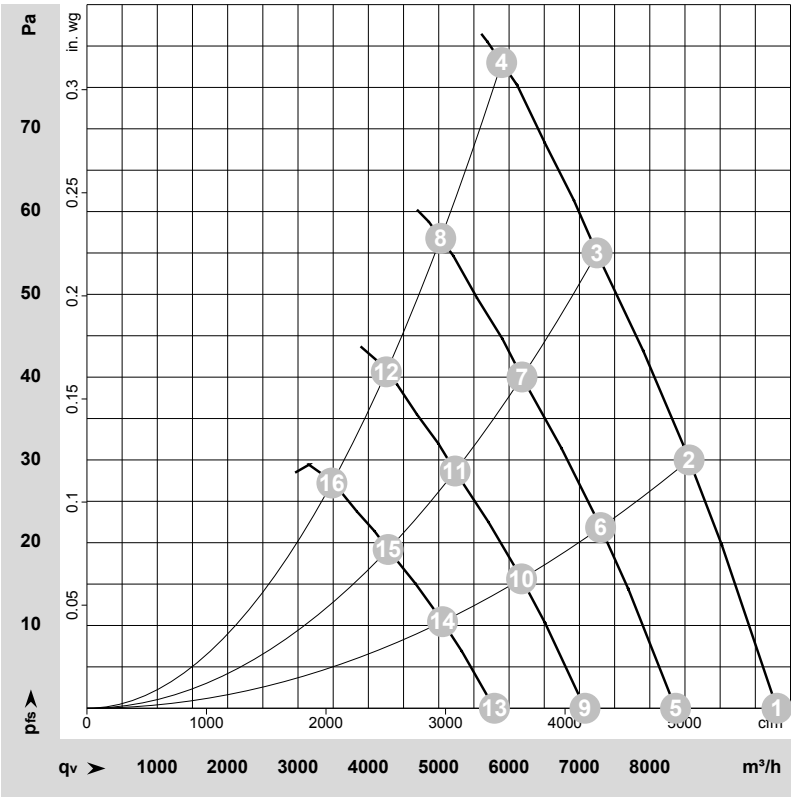

ρ = 1.15 kg/m³ ± 2 %

Measurement: LU-234692-1
Date: 2025-01-23
Housing: 10633-2-4037

Air performance measured according to ISO 5801 installation category A. For detailed information on the measurement setup, contact ebm-papst. Intake sound level: Sound power level according to ISO 13347 / sound pressure level measured at 1 m distance from fan axis. The values given are valid under the specified measuring conditions and may vary due to conditions of installation. For deviations from the standard configuration, the parameters have to be checked on the installed unit.

Measured values

	Wired	U	f	n	P_e	I	LpA_{in}	LwA_{in}	LwA_{out}	LwA	q_V	p_{fs}	q_V	p_{fs}
		V	Hz	min^{-1}	W	A	dB(A)	dB(A)	dB(A)	dB	m^3/h	Pa	cfm	in. wg
1	1~	230	50	760	229	1.48	53	59	58	62	9810	0	5775	0.00
2	1~	230	50	760	269	1.71	51	57	57	60	8560	30	5040	0.12
3	1~	230	50	760	301	1.90	49	56	56	59	7250	55	4265	0.22
4	1~	230	50	760	328	2.05	53	60	59	63	5895	78	3470	0.31
5	1~	230	50	650	142	0.92	49	55	54	58	8365	0	4925	0.00
6	1~	230	50	650	167	1.06	47	53	53	56	7300	22	4295	0.09
7	1~	230	50	650	187	1.18	45	52	52	55	6185	40	3640	0.16
8	1~	230	50	650	204	1.27	49	56	55	59	5030	57	2960	0.23
9	1~	230	50	550	86	0.56	45	51	50	53	7080	0	4165	0.00
10	1~	230	50	550	101	0.64	42	49	49	52	6180	16	3635	0.06
11	1~	230	50	550	113	0.71	41	48	48	51	5235	29	3080	0.12
12	1~	230	50	550	123	0.77	45	52	51	55	4255	41	2505	0.16
13	1~	230	50	450	47	0.30	40	46	45	48	5790	0	3410	0.00
14	1~	230	50	450	55	0.35	37	44	43	47	5055	10	2975	0.04
15	1~	230	50	450	62	0.39	36	43	43	46	4280	19	2520	0.08
16	1~	230	50	450	68	0.42	40	47	46	49	3480	27	2050	0.11

Wired = Wiring · U = Voltage · f = Frequency · n = Speed (rpm) · P_e = Power consumption · I = Current draw · LpA_{in} = Sound pressure level intake side · LwA_{in} = Sound power level intake side
LwA_{out} = Sound power level outlet side · q_V = Air flow · p_{fs} = Pressure increase

ebm-papst Mulfingen GmbH & Co. KG · Bachmühle 2 · D-74673 Mulfingen · Phone +49 (0) 7938 81-0 · Fax +49 (0) 7938 81-110 · info1@de.fansco.com · www.fansco.com