8300101576

VMA0350HSNJS

EC axial panel fan - HyBlade

sickle-shaped blades (S series)

with guard grille for short nozzle

www.fansco.com

sales@fansco.com

Nominal data

Item	**8300101576**
Motor	**E07434-43**

Phase		1~
Nominal voltage	VAC	230
Nominal voltage range	VAC	200 .. 277
Frequency	Hz	50/60
Method of obtaining data		ml
Status		prelim.
Speed (rpm)	min^{-1}	1750
Power consumption	W	250
Current draw	A	1.1
Max. back pressure	Pa	145
Max. back pressure	in. wg	0.58
Min. ambient temperature	°C	-25
Max. ambient temperature	°C	60

ml = Max. load · me = Max. efficiency · fa = Free air · cs = Customer specification · ce = Customer equipment
Subject to change

Data according to Commission Regulation (EU) 327/2011 (prEN 17166)

		Actual	Req. 2015
01 Overall efficiency η_{es}	%	44.6	29.9
02 Measurement category		A	
03 Efficiency category		Static	
04 Efficiency grade N		54.7	40
05 Variable speed drive		Yes	

09 Power consumption P_{ed}	kW	0.25
09 Air flow q_v	m³/h	2380
09 Pressure increase p_{fs}	Pa	157
10 Speed (rpm) n	min^{-1}	1755
11 Specific ratio*		1.00

Data obtained at optimum efficiency level.

* Specific ratio = 1 + p_{fs} / 100 000 Pa

LU-231358

The efficiency values displayed for achieving conformity with the Ecodesign Regulation EU 327/2011 has been reached with defined air duct components (e.g. inlet rings).
The dimensions must be requested from ebm-papst. If other air conduction geometries are used on the installation side, the ebm-papst evaluation loses its validity/the conformity must be confirmed again.

The product does not fall within the scope of Regulation (EU) 2019/1781 due to the exception specified in Article 2 (2a) (motors completely integrated into a product).

EC axial panel fan - HyBlade

sickle-shaped blades (S series)
with guard grille for short nozzle

Technical description

Size	350 mm
Motor size	74
Rotor surface	Thick-film passivated
Electronics housing material	Die-cast aluminum
Impeller material	Press-fitted sheet steel blank, sprayed with PP plastic
Guard grille material	Steel, coated with black plastic (RAL 9005)
Number of blades	5
Airflow direction	V
Direction of rotation	Counterclockwise, viewed toward rotor
Degree of protection	IP54
Insulation class	"B"
Moisture (F) / Environmental (H) protection class	H1 = Moist – occasional or constantly high level of humidity
Max. permitted ambient temp. for motor (transport/storage)	+80 °C
Min. permitted ambient temp. for motor (transport/storage)	-40 °C
Installation position	Any
Condensation drainage holes	None, open rotor
Mode	S1
Motor bearing	Ball bearing
Technical features	- Locked-rotor detection - Speed control - Alarm relay - Power limiter - Motor current limitation - PFC, active - Soft start - Control interface with SELV potential safely disconnected from the mains - Temperature derating - Thermal overload protection for electronics/motor - Line undervoltage / phase failure detection
Power Factor Correction (PFC)	Active
Touch current according to IEC 60990 (measuring circuit Fig. 4, TN system)	<= 3.5 mA
Motor protection	Electronic motor protection
With cable	Variable
Protection class assignment	I; If a protective earth is connected. The built-in component has several local protection class assignments. The final protection class is determined by the intended installation.
Conformity with standards	EN 60335-1; EN 60034-1; EN 60204-1; CE; UKCA

8300101576

VMA0350HSNJS

EC axial panel fan - HyBlade

sickle-shaped blades (S series)

with guard grille for short nozzle

Product drawing

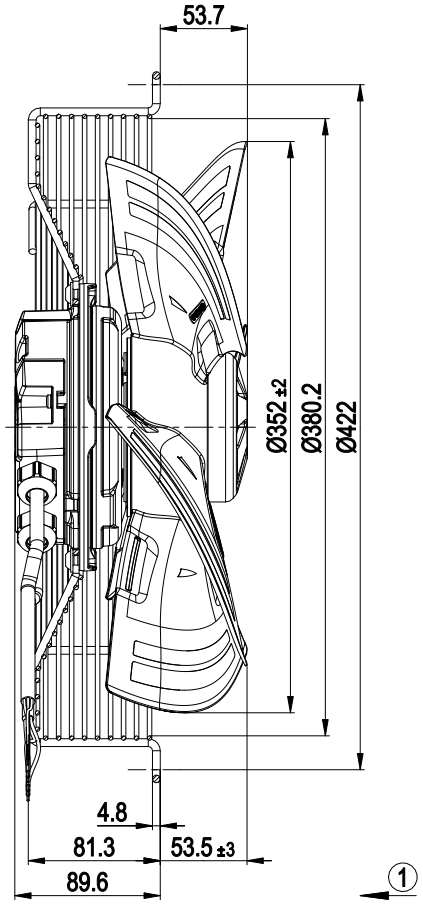

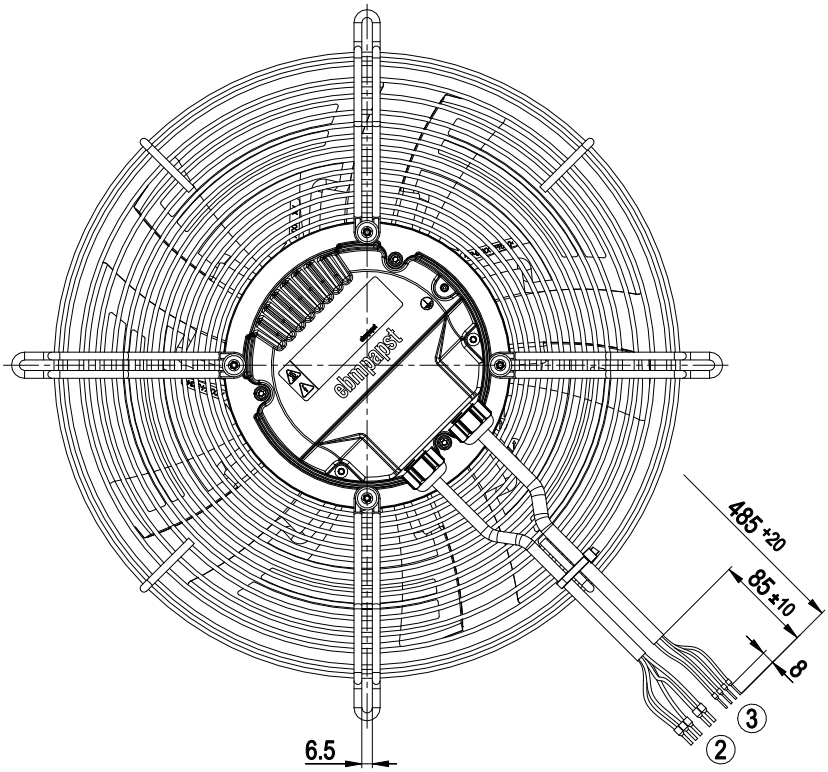

1	Airflow direction "V"
2	Supply line (PWR) PVC AWG18
	5x wire-end ferrule
3	Control wire (CTRL) PVC AWG22
	4x wire-end ferrule

Connection diagram

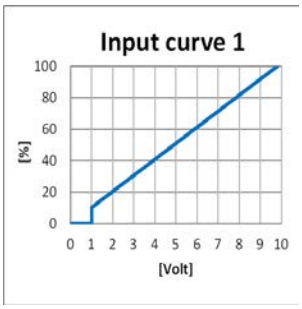

No.	Conn.	Designation	Color	Function/assignment
	PWR	PE	green/yellow	Protective earth
	PWR	L	black	Power supply, phase, see nameplate for voltage range
	PWR	N	blue	Power supply, neutral conductor, see nameplate for voltage range
	PWR	COM	orange	Status relay, floating status contact, common connection, contact rating 250 VAC / 2 A (AC1) / min. 10 mA, reinforced insulation on supply side and on control interface side
	PWR	NC	orange	Status relay, floating status contact, break for failure
	CTRL	GND	blue	Reference ground for control interface, SELV
	CTRL	Vout	red	Voltage output 10 VDC +/-3%, Imax=10 mA Short-circuit-proof, power supply for external devices, SELV
	CTRL	IO1	yellow	Factory setting: Analog input 0-10 V / PWM, Ri=100 kΩ, function: set value Characteristic curve parameterizable (see input characteristic curve "Input curve 1"), SELV Function parameterizable at the factory (see table Optional interface functions)
	CTRL	IO2	white	Factory setting: Open collector output, Umax=50 VDC, Imax=20 mA, function:Tacho output 1 pulse/revolution, SELV Function parameterizable at factory (see table Optional interface functions)

Terminal/plug assignment

Basic (B5)
Factory configuration option upon request

○ *factory configuration option*

	configurable IO mode	electrical specification	INPUT: source: set value	INPUT: switch: parameter set: #1 / #2	INPUT: switch: direction of rotation: cw / ccw	INPUT: switch: enable/disable input	INPUT: configurable function	OUTPUT: signal: tach out	OUTPUT: signal: diagnostics out	OUTPUT: signal: alarm out	OUTPUT: signal: run monitoring	OUTPUT: signal: status	OUTPUT: signal: configurable function
IO1	○ Din1 (high active): digital input	active: parametrizable voltage x - 30 VDC not active: pin open or parametrizable voltage < x VDC, SELV		○	○	○							
	○ Ain1 0-10 V/PWM: analog input	Ri = 100 kΩ, characteristic curve parameterizable, f_{PWM} = 1 k - 10 kHz, SELV	○				○						
IO2	○ Tach out (open collector)	Umax = 50 VDC, Imax = 20 mA, SELV						○					
	○ Diagnostics out (open collector)	Umax = 50 VDC, Imax = 20 mA, SELV							○				
	○ Alarm out (open collector)	Umax = 50 VDC, Imax = 20 mA, SELV								○			
	○ Open collector	Umax = 50 VDC, Imax = 20 mA, SELV											○
COM NC	Relais	250 VAC / 2 A (AC1)									○	○	○
Vout	Voltage output	Voltage 10 VDC, SELV											

8300101576

VMA0350HSNJS

EC axial panel fan - HyBlade

sickle-shaped blades (S series)

with guard grille for short nozzle

Curves: Air performance 50 Hz

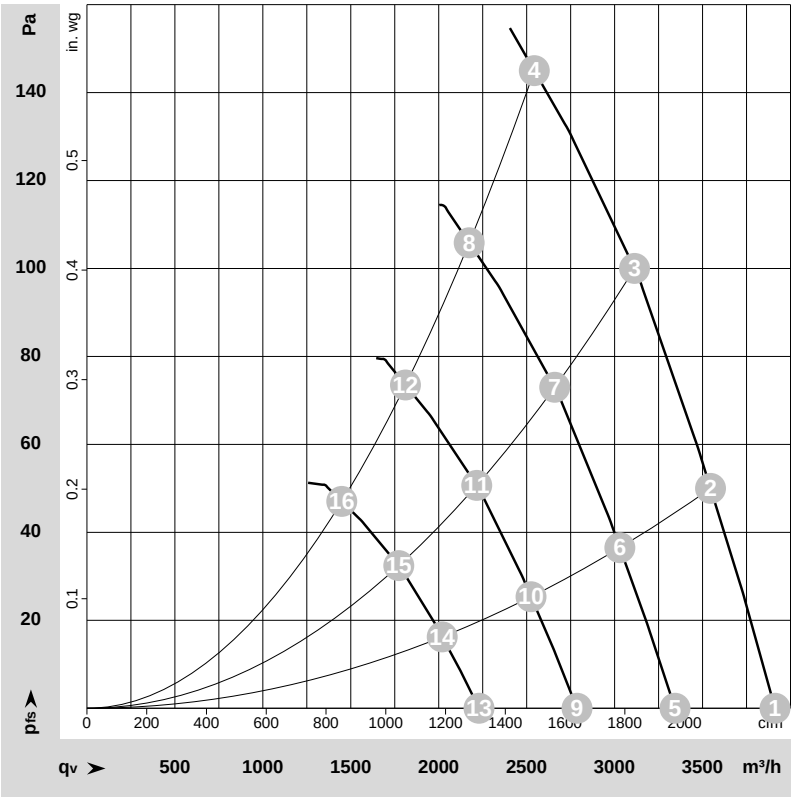

ρ = 1.15 kg/m³ ± 2 %

Measurement: LU-231358-1
Date: 2024-03-22
Housing: 09441-2-4037

Air performance measured according to ISO 5801 installation category A. For detailed information on the measurement setup, contact ebm-papst. Intake sound level: Sound power level according to ISO 13347 / sound pressure level measured at 1 m distance from fan axis. The values given are valid under the specified measuring conditions and may vary due to conditions of installation. For deviations from the standard configuration, the parameters have to be checked on the installed unit.

Measured values

	Wired	U	f	n	P_e	I	LpA_{in}	LwA_{in}	q_V	p_{fs}	q_V	p_{fs}
		V	Hz	min^{-1}	W	A	dB(A)	dB(A)	m^3/h	Pa	cfm	in. wg
1	1~	230	50	1755	202	0.91	65	72	3910	0	2305	0.00
2	1~	230	50	1755	223	1.00	63	70	3545	50	2085	0.20
3	1~	230	50	1755	242	1.08	61	68	3115	100	1830	0.40
4	1~	230	50	1755	251	1.12	60	68	2545	145	1495	0.58
5	1~	230	50	1500	126	0.57	61	68	3345	0	1970	0.00
6	1~	230	50	1500	139	0.63	59	66	3030	37	1785	0.15
7	1~	230	50	1500	151	0.68	57	64	2660	73	1565	0.29
8	1~	230	50	1500	157	0.70	56	64	2175	106	1280	0.43
9	1~	230	50	1250	73	0.33	57	64	2785	0	1640	0.00
10	1~	230	50	1250	81	0.36	55	62	2525	25	1485	0.10
11	1~	230	50	1250	87	0.39	52	59	2215	51	1305	0.20
12	1~	230	50	1250	91	0.41	52	60	1810	74	1065	0.30
13	1~	230	50	1000	37	0.17	51	58	2230	0	1310	0.00
14	1~	230	50	1000	41	0.19	49	56	2020	16	1190	0.06
15	1~	230	50	1000	45	0.20	47	54	1775	32	1045	0.13
16	1~	230	50	1000	46	0.21	46	54	1450	47	855	0.19

Wired = Wiring · U = Voltage · f = Frequency · n = Speed (rpm) · P_e = Power consumption · I = Current draw · LpA_{in} = Sound pressure level intake side · LwA_{in} = Sound power level intake side
q_V = Air flow · p_{fs} = Pressure increase

8300101576 ebmpapst Datesheet www.fansco.com sales@fansco.com