8300101527

VVY0500HSPHS

EC axial panel fan - HyBlade

sickle-shaped blades (S series)

www.fansco.com
sales@fansco.com

Nominal data

Item	**8300101527**
Motor	**E09002-40**

Phase		1~
Nominal voltage	VAC	230
Nominal voltage range	VAC	200 .. 277
Frequency	Hz	50/60
Method of obtaining data		ml/ce
Speed (rpm)	min^{-1}	1260
Power consumption	W	500
Current draw	A	2.2
Max. back pressure	Pa	140
Max. back pressure	in. wg	0.56
Min. ambient temperature	°C	-25
Max. ambient temperature	°C	60

ml = Max. load · me = Max. efficiency · fa = Free air · cs = Customer specification · ce = Customer equipment
Subject to change

Data according to Commission Regulation (EU) 327/2011 (prEN 17166)

		Actual	Req. 2015
01 Overall efficiency η_{es}	%	44.4	31.8
02 Measurement category		A	
03 Efficiency category		Static	
04 Efficiency grade N		52.6	40
05 Variable speed drive		Yes	

09 Power consumption P_{ed}	kW	0.5
09 Air flow q_v	m³/h	5125
09 Pressure increase p_{fs}	Pa	143
10 Speed (rpm) n	min^{-1}	1255
11 Specific ratio*		1.00

Data obtained at optimum efficiency level.

* Specific ratio = 1 + p_{fs} / 100 000 Pa

LU-226198

The efficiency values displayed for achieving conformity with the Ecodesign Regulation EU 327/2011 has been reached with defined air duct components (e.g. inlet rings).
The dimensions must be requested from ebm-papst. If other air conduction geometries are used on the installation side, the ebm-papst evaluation loses its validity/the conformity must be confirmed again.

The product does not fall within the scope of Regulation (EU) 2019/1781 due to the exception specified in Article 2 (2a) (motors completely integrated into a product).

EC axial panel fan - HyBlade

sickle-shaped blades (S series)

Technical description

Weight	5.62 kg
Size	500 mm
Motor size	90
Rotor surface	Painted black
Terminal box material	PA plastic
Electronics housing material	Die-cast aluminum, painted gray
Impeller material	PP plastic
Number of blades	5
Airflow direction	V
Direction of rotation	Counterclockwise, viewed toward rotor
Degree of protection	IP55
Insulation class	"F"
Moisture (F) / Environmental (H) protection class	H2 = Wet – direct exposure to water
Max. permitted ambient temp. for motor (transport/storage)	+80 °C
Min. permitted ambient temp. for motor (transport/storage)	-40 °C
Installation position	Shaft horizontal or rotor on bottom; rotor on top on request
Condensation drainage holes	On rotor side
Mode	S1
Motor bearing	Ball bearing; (sealed)
Technical features	- Locked-rotor detection - Speed control - Alarm relay - Power limiter - Motor current limitation - Soft start - Control interface with SELV potential safely disconnected from the mains - Temperature derating - Thermal overload protection for electronics/motor - Line undervoltage / phase failure detection
Power Factor Correction (PFC)	Active
Touch current according to IEC 60990 (measuring circuit Fig. 4, TN system)	<= 3.5 mA
Electrical hookup	Terminal box
Motor protection	Electronic motor protection
Protection class assignment	I; If a protective earth is connected. The built-in component has several local protection class assignments. The final protection class is determined by the intended installation.
Safety class of the permissible refrigerants according to EN378 / ISO5149-1	A3/B3
Maximum surface temperature	240 °C
Conformity with standards	EN 60335-1; EN 60335-2-40; EN 61800-5-1; UKCA; CE
Approval	UL 1004-7 + 60730-1; CSA C22.2 No. 77 + CAN/CSA-E60730-1

EC axial panel fan - HyBlade

sickle-shaped blades (S series)

Product drawing

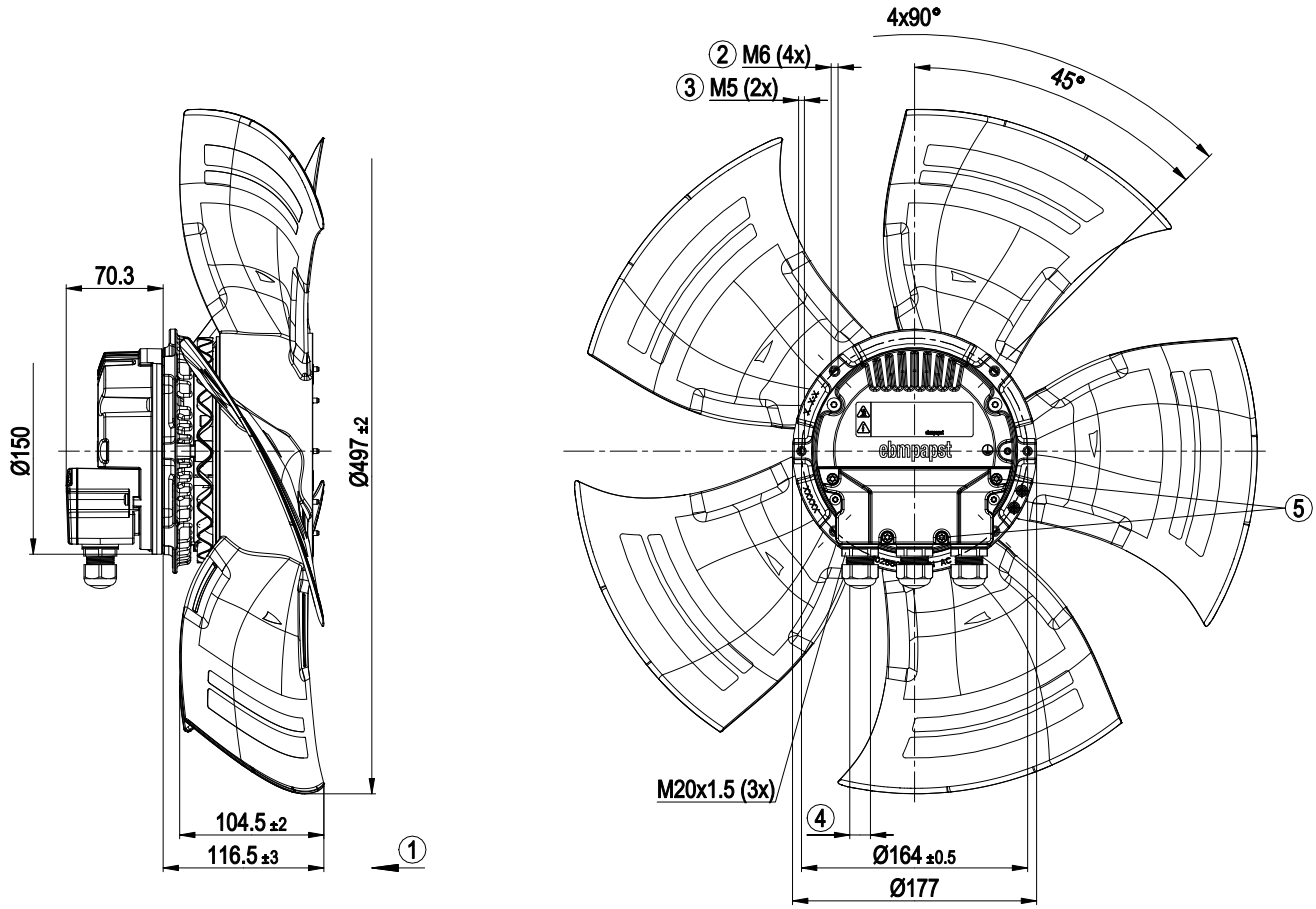

1	Airflow direction "V"
2	Max. clearance for screw 10 mm
3	Max. clearance for screw 10 mm
	The M5 tapped holes (2x) can be used to attach hoisting equipment.
4	Cable diameter min. 4 mm, max. 10 mm, tightening torque 4 ± 0.6 Nm
	(The tightening torque is designed for PVC cables. If the cable materials are different, the tightening torque may have to be adjusted)
5	Tightening torque 2±0.3 Nm

Connection diagram

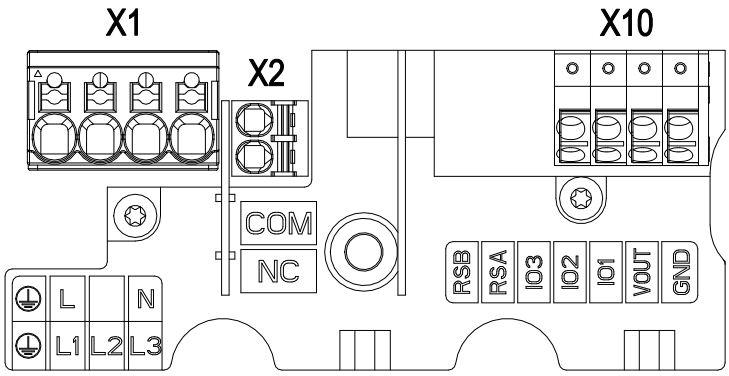

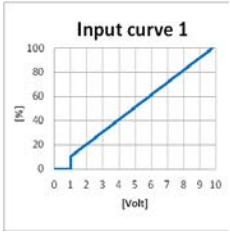

No.	Conn.	Designation	Function/assignment
X1	PWR	PE	Protective earth
X1	PWR	L	Power supply, phase, see nameplate for voltage range
X1	PWR	N	Power supply, neutral conductor, see nameplate for voltage range
X2	CTRL	COM	Status relay, floating status contact, common connection, contact rating 250 VAC / 2 A (AC1) / min. 10 mA, reinforced insulation on supply side and on control interface side
X2	CTRL	NC	Status relay, floating status contact, break for failure
X10	CTRL	GND	Reference ground for control interface, SELV
X10	CTRL	Vout	Voltage output 10 VDC +/-3%, Imax=10 mA Short-circuit-proof, power supply for external devices, SELV
X10	CTRL	IO1	Factory setting: Analog input 0-10 V / PWM, Ri=100 kΩ, function: set value Characteristic curve parameterizable (see input characteristic curve "Input curve 1"), SELV Function parameterizable at the factory (see table Optional interface functions)
X10	CTRL	IO2	Factory setting: Open collector output, Umax=50 VDC, Imax=20 mA, function:Tacho output 1 pulse/revolution, SELV Function parameterizable at factory (see table Optional interface functions)

Terminal/plug assignment

Basic (B5)

Factory configuration option upon request

○ *factory configuration option*

	configurable IO mode	electrical specification	INPUT					OUTPUT				
			source: set value	switch: parameter set: #1 / #2	switch: direction of rotation: cw / ccw	switch: enable/disable input	configurable function	signal: tach out	signal: diagnostics out	signal: alarm out	signal: run monitoring	signal: status	signal: configurable function
IO1	○ Din1 (high active): digital input	active: parametrizable voltage x - 30 VDC not active: pin open or parametrizable voltage < x VDC, SELV		○	○	○							
	○ Ain1 0-10 V/PWM: analog input	Ri = 100 kΩ, characteristic curve parameterizable, f_{PWM} = 1 k - 10 kHz, SELV	○				○						
IO2	○ Tach out (open collector)	Umax = 50 VDC, Imax = 20 mA, SELV						○					
	○ Diagnostics out (open collector)	Umax = 50 VDC, Imax = 20 mA, SELV							○				
	○ Alarm out (open collector)	Umax = 50 VDC, Imax = 20 mA, SELV								○			
	○ Open collector	Umax = 50 VDC, Imax = 20 mA, SELV											○
COM NC	Relais	250 VAC / 2 A (AC1)									○	○	○
Vout	Voltage output	Voltage 10 VDC, SELV											

8300101527

VVY0500HSPHS

EC axial panel fan - HyBlade

sickle-shaped blades (S series)

Curves: Air performance 50 Hz

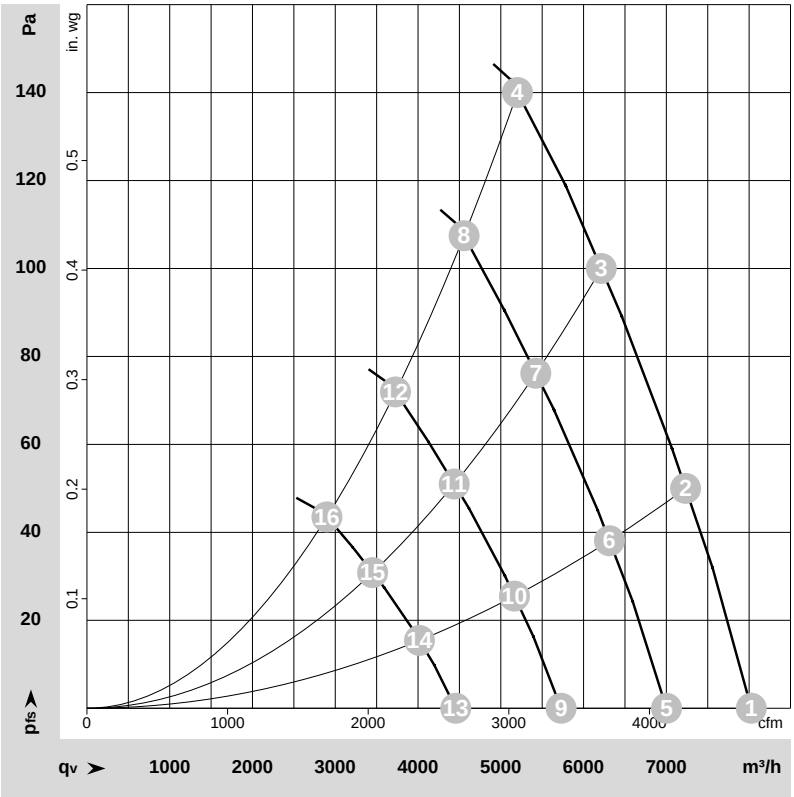

ρ = 1.15 kg/m³ ± 2 %

Measurement: LU-226198-1
Date: 2023-03-29
Housing: 10501-2-4037

Air performance measured according to ISO 5801 installation category A. For detailed information on the measurement setup, contact ebm-papst. Intake sound level: Sound power level according to ISO 13347 / sound pressure level measured at 1 m distance from fan axis. The values given are valid under the specified measuring conditions and may vary due to conditions of installation. For deviations from the standard configuration, the parameters have to be checked on the installed unit.

Measured values

	Wired	U	f	n	P_e	I	LpA_{in}	LwA_{in}	LwA_{out}	LwA	q_V	p_{fs}	q_V	p_{fs}
		V	Hz	min^{-1}	W	A	dB(A)	dB(A)	dB(A)	dB	m^3/h	Pa	cfm	in. wg
1	1~	230	50	1260	354	1.58	66	73	73	76	8025	0	4725	0.00
2	1~	230	50	1260	416	1.84	64	71	71	74	7230	50	4255	0.20
3	1~	230	50	1260	470	2.07	61	69	68	71	6215	100	3655	0.40
4	1~	230	50	1255	504	2.22	62	69	69	72	5200	140	3060	0.56
5	1~	230	50	1100	235	1.05	63	70	69	73	7000	0	4120	0.00
6	1~	230	50	1100	277	1.22	60	67	67	70	6310	38	3715	0.15
7	1~	230	50	1100	313	1.38	58	65	65	68	5425	76	3190	0.31
8	1~	230	50	1100	339	1.49	58	66	65	69	4555	107	2680	0.43
9	1~	230	50	900	129	0.57	58	65	64	68	5730	0	3370	0.00
10	1~	230	50	900	152	0.67	55	62	62	65	5165	25	3040	0.10
11	1~	230	50	900	171	0.76	53	60	60	63	4435	51	2610	0.20
12	1~	230	50	900	186	0.82	53	61	60	64	3730	72	2195	0.29
13	1~	230	50	700	61	0.27	51	58	58	61	4455	0	2625	0.00
14	1~	230	50	700	71	0.32	49	56	56	59	4015	15	2365	0.06
15	1~	230	50	700	81	0.36	47	54	54	57	3450	31	2030	0.12
16	1~	230	50	700	87	0.38	47	55	54	57	2900	44	1705	0.18

Wired = Wiring · U = Voltage · f = Frequency · n = Speed (rpm) · P_e = Power consumption · I = Current draw · LpA_{in} = Sound pressure level intake side · LwA_{in} = Sound power level intake side
LwA_{out} = Sound power level outlet side · q_V = Air flow · p_{fs} = Pressure increase

8300101527 ebmpapst Datesheet www.fansco.com sales@fansco.com