8300101413

VWB0500NSNJS

EC axial panel fan - AxiTone

sickle-shaped blades (S series)

Fan housing with mounting grille

ebm-papst Mulfingen GmbH & Co. KG
Bachmühle 2 · D-74673 Mulfingen
Phone +49 7938 81-0
Fax +49 7938 81-110
info1@de.fansco.com
www.fansco.com

Limited partnership · Headquarters Mulfingen
Amtsgericht (court of registration) Stuttgart · HRA 590344

General partner Elektrobau Mulfingen GmbH · Headquarters Mulfingen
Amtsgericht (court of registration) Stuttgart · HRB 590142

Nominal data

Item	**8300101413**
Motor	**E07433-43**

Phase		1~
Nominal voltage	VAC	230
Nominal voltage range	VAC	200 .. 240
Frequency	Hz	50/60
Method of obtaining data		ml
Status		prelim.
Speed (rpm)	min^{-1}	850
Power consumption	W	153
Current draw	A	1.3
Max. back pressure	Pa	57
Max. back pressure	in. wg	0.23
Min. ambient temperature	°C	-25
Max. ambient temperature	°C	60

ml = Max. load · me = Max. efficiency · fa = Free air · cs = Customer specification · ce = Customer equipment
Subject to change

Data according to Commission Regulation (EU) 327/2011 (prEN 17166)

		Actual	Req. 2015
01 Overall efficiency η_{es}	%	40.4	28.5
02 Measurement category		A	
03 Efficiency category		Static	
04 Efficiency grade N		51.9	40
05 Variable speed drive		Yes	

09 Power consumption P_{ed}	kW	0.15
09 Air flow q_v	m³/h	3380
09 Pressure increase p_{fs}	Pa	58
10 Speed (rpm) n	min^{-1}	835
11 Specific ratio*		1.00

Data obtained at optimum efficiency level.

* Specific ratio = 1 + p_{fs} / 100 000 Pa

LU-229897

The efficiency values displayed for achieving conformity with the Ecodesign Regulation EU 327/2011 has been reached with defined air duct components (e.g. inlet rings).
The dimensions must be requested from ebm-papst. If other air conduction geometries are used on the installation side, the ebm-papst evaluation loses its validity/the conformity must be confirmed again.

The product does not fall within the scope of Regulation (EU) 2019/1781 due to the exception specified in Article 2 (2a) (motors completely integrated into a product).

EC axial panel fan - AxiTone

sickle-shaped blades (S series)
Fan housing with mounting grille

Technical description

Size	500 mm
Motor size	74
Rotor surface	Thick-film passivated
Electronics housing material	Die-cast aluminum
Impeller material	PP plastic
Fan housing material	Sheet steel, galvanized and coated with black plastic (RAL 9005)
Support bracket material	Steel, coated with black plastic (RAL 9005)
Number of blades	3
Airflow direction	V
Direction of rotation	Clockwise, viewed toward rotor
Degree of protection	IP54
Insulation class	"B"
Moisture (F) / Environmental (H) protection class	H1
Max. permitted ambient temp. for motor (transport/storage)	+ 80 °C
Min. permitted ambient temp. for motor (transport/storage)	- 40 °C
Installation position	Any
Condensation drainage holes	None, open rotor
Mode	S1
Motor bearing	Ball bearing
Technical features	- Output 10 VDC, max. 10 mA - Locked-rotor detection - Tach output - Speed control - Power limiter - Motor current limitation - Soft start - Control input 0-10 VDC / PWM - Control interface with SELV potential safely disconnected from the mains - Overvoltage detection - Thermal overload protection for electronics/motor - Line undervoltage detection
EMC immunity to interference	According to EN 61000-6-2 (industrial environment)
EMC interference emission	According to EN 61000-6-4 (industrial environment)
Touch current according to IEC 60990 (measuring circuit Fig. 4, TN system)	<= 3.5 mA
Motor protection	Electronic motor protection
With cable	Variable
Protection class assignment	I; If a protective earth is connected. The built-in component has several local protection class assignments. The final protection class is determined by the intended installation.
Conformity with standards	EN 60335-1; EN 60034-1; EN 60204-1; CE; UKCA
Approval	CSA C22.2 No. 77 + CAN/CSA-E60730-1; UL 1004-7 + 60730-1

ebm-papst Mulfingen GmbH & Co. KG · Bachmühle 2 · D-74673 Mulfingen · Phone +49 (0) 7938 81-0 · Fax +49 (0) 7938 81-110 · info1@de.fansco.com · www.fansco.com

8300101413

VWB0500NSNJS

EC axial panel fan - AxiTone

sickle-shaped blades (S series)

Fan housing with mounting grille

Product drawing

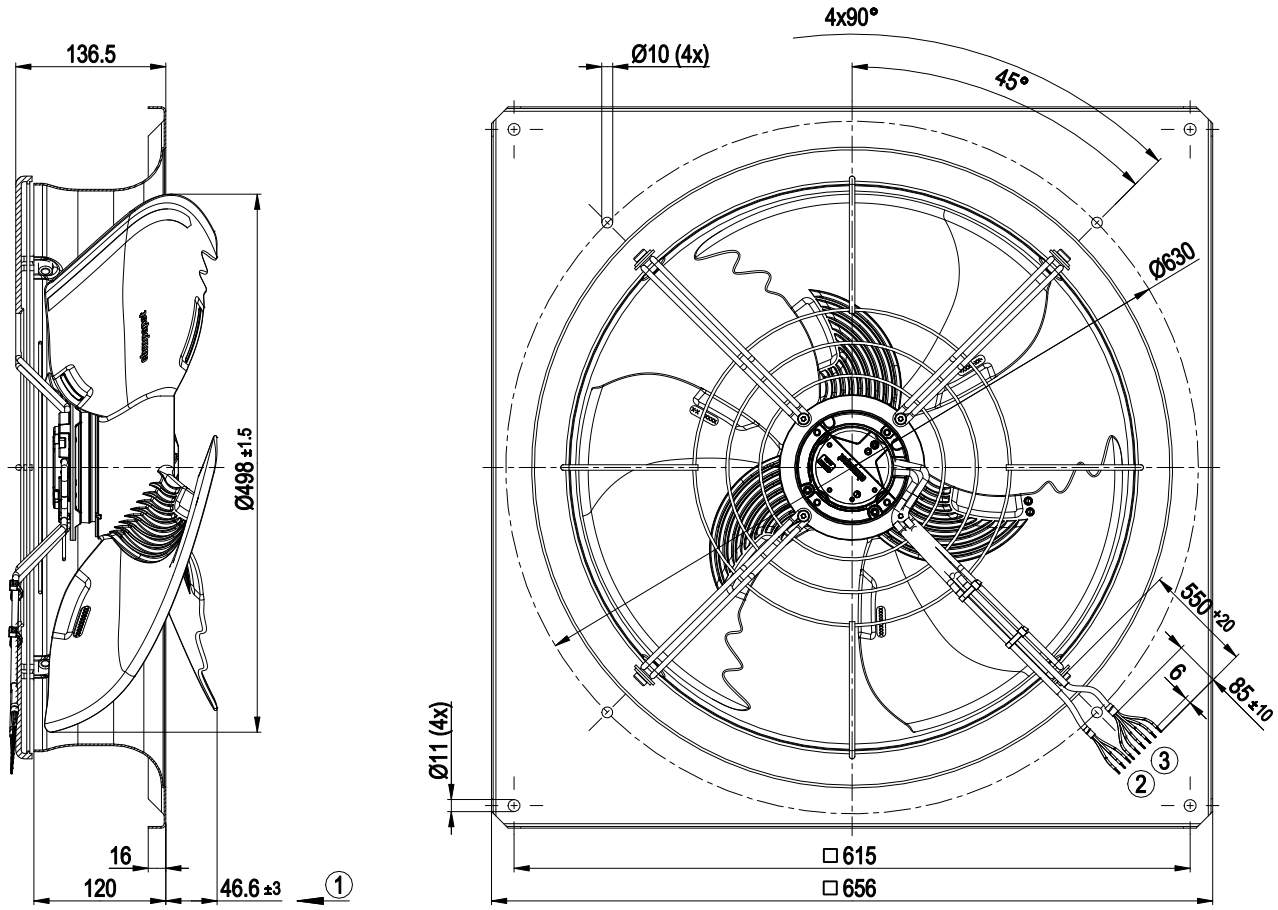

1	Airflow direction "V"
2	Supply line (PWR) PVC AWG20
	3x splice
3	Control wire (CTRL) PVC AWG22
	6x splice

ebm-papst Mulfingen GmbH & Co. KG · Bachmühle 2 · D-74673 Mulfingen · Phone +49 (0) 7938 81-0 · Fax +49 (0) 7938 81-110 · info1@de.fansco.com · www.fansco.com

Connection diagram

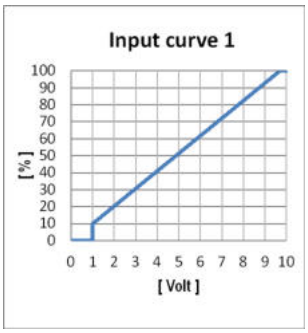

No.	Conn.	Designation	Color	Function/assignment
	PWR	L	black	Power supply, phase, see nameplate for voltage range
	PWR	N	blue	Power supply, neutral conductor, see nameplate for voltage range
	PWR	PE	green/yellow	Protective earth
	CTRL	GND	blue	Reference ground for control interface, SELV
	CTRL	IO1	yellow	Factory setting: Analog input 0-10 V/PWM, Ri=100 KΩ, fPWM=1 kHz..10 kHz, Function: Speed set value Characteristic curve parameterizable (see "Input curve 1"), SELV Function parameterizable at the factory (see Optional interface functions table)
	CTRL	IO2	white	Factory setting: Open collector output, Umax=50 VDC, Imax= 10 mA, function: Tach output 1 pulse/revolution, SELV Function parameterizable at factory (see table Optional interface functions)
	CTRL	Vout	red	Voltage output 10 VDC +/-3%, Imax=10 mA Short-circuit-proof, power supply for external devices, SELV
	CTRL	-	gray	No function
	CTRL	-	brown	No function

ebm-papst Mulfingen GmbH & Co. KG · Bachmühle 2 · D-74673 Mulfingen · Phone +49 (0) 7938 81-0 · Fax +49 (0) 7938 81-110 · info1@de.fansco.com · www.fansco.com

Terminal/plug assignment

Basic (B4)

Factory configuration option upon request

○ *Factory configuration option*

	configurable IO mode	electrical specification	INPUT: source: set value	INPUT: switch: parameter set: #1 / #2	INPUT: switch: direction of rotation: cw / ccw	INPUT: switch: enable/disable input	INPUT: configurable function	OUTPUT: signal: tach out	OUTPUT: signal: diagnostics out	OUTPUT: signal: alarm out	OUTPUT: signal: run monitoring	OUTPUT: signal: status	OUTPUT: signal: configurable function
IO1	○ **Din1 (high active)**: digital input	active: parameterizable voltage x-30 VDC not active: pin open or parameterizable voltage <x VDC, SELV		○	○	○	○						
	○ **Ain1 0-10 V/PWM:** analog input	Ri = 100 kΩ, characteristic curve parameterizable, f_{PWM} = 1k..10 kHz, SELV	○				○						
IO2	○ **Tach out** (open collector)	Umax=50 VDC, Imax=10 mA, SELV						○					
	○ **Diagnostics out** (open collector)	Umax=50 VDC, Imax=10 mA, SELV							○				
	○ **Alarm out** (open collector)	Umax=50 VDC, Imax=10 mA, SELV								○			
	○ **Open collector**	Umax=50 VDC, Imax=10 mA, SELV									○	○	○
Vout	Voltage output	Voltage10 VDC, SELV											

ebm-papst Mulfingen GmbH & Co. KG · Bachmühle 2 · D-74673 Mulfingen · Phone +49 (0) 7938 81-0 · Fax +49 (0) 7938 81-110 · info1@de.fansco.com · www.fansco.com

8300101413

VWB0500NSNJS

EC axial panel fan - AxiTone

sickle-shaped blades (S series)

Fan housing with mounting grille

Curves: Air performance 50 Hz

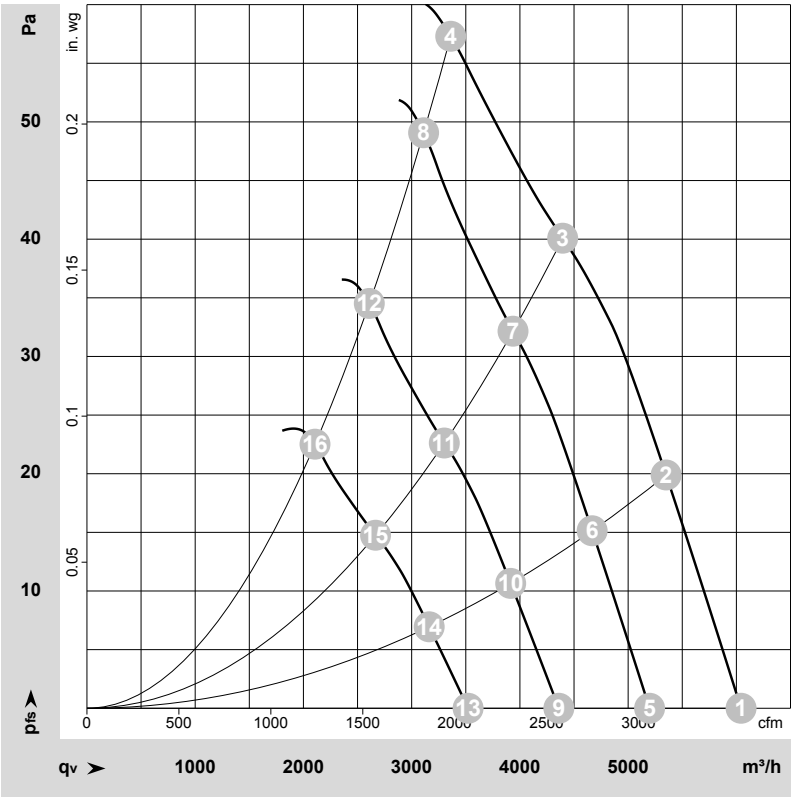

ρ = 1.15 kg/m³ ± 2 %

Measurement: LU-229897-1
Date: 2023-11-30
Housing: 10501-2-4037

Air performance measured according to ISO 5801 installation category A. For detailed information on the measurement setup, contact ebm-papst. Intake sound level: Sound power level according to ISO 13347 / sound pressure level measured at 1 m distance from fan axis. The values given are valid under the specified measuring conditions and may vary due to conditions of installation. For deviations from the standard configuration, the parameters have to be checked on the installed unit.

Measured values

	Wired	U	f	n	P_e	I	LpA_{in}	LwA_{in}	LwA_{out}	LwA	q_V	p_{fs}	q_V	p_{fs}
		V	Hz	min^{-1}	W	A	dB(A)	dB(A)	dB(A)	dB	m^3/h	Pa	cfm	in. wg
1	1~	230	50	900	138	1.16	54	61	60	63	6045	0	3555	0.00
2	1~	230	50	890	148	1.24	51	59	58	62	5350	20	3150	0.08
3	1~	230	50	865	153	1.30	48	56	56	59	4395	40	2585	0.16
4	1~	230	50	850	153	1.30	48	56	56	59	3360	57	1980	0.23
5	1~	230	50	775	88	0.74	50	57	56	60	5200	0	3060	0.00
6	1~	230	50	775	98	0.82	48	56	55	58	4670	15	2745	0.06
7	1~	230	50	775	109	0.92	46	53	53	56	3935	32	2315	0.13
8	1~	230	50	775	121	1.02	46	54	54	57	3110	49	1830	0.20
9	1~	230	50	650	52	0.44	46	53	52	55	4360	0	2565	0.00
10	1~	230	50	650	58	0.48	44	51	50	54	3915	11	2305	0.04
11	1~	230	50	650	64	0.54	41	49	49	52	3300	23	1945	0.09
12	1~	230	50	650	71	0.60	42	50	49	53	2610	35	1535	0.14
13	1~	230	50	525	27	0.23	40	47	46	50	3520	0	2070	0.00
14	1~	230	50	525	30	0.25	38	46	45	48	3160	7	1860	0.03
15	1~	230	50	525	34	0.29	36	44	43	46	2665	15	1570	0.06
16	1~	230	50	525	38	0.32	36	45	44	47	2105	23	1240	0.09

Wired = Wiring · U = Voltage · f = Frequency · n = Speed (rpm) · P_e = Power consumption · I = Current draw · LpA_{in} = Sound pressure level intake side · LwA_{in} = Sound power level intake side
LwA_{out} = Sound power level outlet side · q_V = Air flow · p_{fs} = Pressure increase

ebm-papst Mulfingen GmbH & Co. KG · Bachmühle 2 · D-74673 Mulfingen · Phone +49 (0) 7938 81-0 · Fax +49 (0) 7938 81-110 · info1@de.fansco.com · www.fansco.com