8300101330

VMA0300CSNDS

EC axial panel fan - AxiEco

with guard grille

sales@fansco.com
https://www.fansco.com

Nominal data

Item	**8300101330**
Motor	**E07433-18**

Phase		1~
Nominal voltage	VAC	230
Nominal voltage range	VAC	200 .. 240
Frequency	Hz	50/60
Method of obtaining data		ml
Status		prelim.
Speed (rpm)	min^{-1}	1900
Power consumption	W	170
Current draw	A	1.4
Max. back pressure	Pa	185
Max. back pressure	in. wg	0.74
Min. ambient temperature	°C	-25
Max. ambient temperature	°C	60

ml = Max. load · me = Max. efficiency · fa = Free air · cs = Customer specification · ce = Customer equipment
Subject to change

Data according to Commission Regulation (EU) 327/2011 (prEN 17166)

		Actual	Req. 2015
01 Overall efficiency η_{es}	%	43.7	28.8
02 Measurement category		A	
03 Efficiency category		Static	
04 Efficiency grade N		54.9	40
05 Variable speed drive		Yes	

09 Power consumption P_{ed}	kW	0.16
09 Air flow q_v	m³/h	1820
09 Pressure increase p_{fs}	Pa	129
10 Speed (rpm) n	min^{-1}	1955
11 Specific ratio*		1.00

Data obtained at optimum efficiency level.

* Specific ratio = 1 + p_{fs} / 100 000 Pa

LU-227739

The efficiency values displayed for achieving conformity with the Ecodesign Regulation EU 327/2011 has been reached with defined air duct components (e.g. inlet rings).
The dimensions must be requested from ebm-papst. If other air conduction geometries are used on the installation side, the ebm-papst evaluation loses its validity/the conformity must be confirmed again.

The product does not fall within the scope of Regulation (EU) 2019/1781 due to the exception specified in Article 2 (2a) (motors completely integrated into a product).

EC axial panel fan - AxiEco

with guard grille

Technical description

Size	300 mm
Motor size	74
Rotor surface	Thick-film passivated
Electronics housing material	Die-cast aluminum
Impeller material	PP plastic
Guard grille material	Steel, coated with black plastic (RAL 9005)
Number of blades	5
Airflow direction	V
Direction of rotation	Clockwise, viewed toward rotor
Degree of protection	IP54
Insulation class	"B"
Moisture (F) / Environmental (H) protection class	H1
Max. permitted ambient temp. for motor (transport/storage)	+80 °C
Min. permitted ambient temp. for motor (transport/storage)	-40 °C
Installation position	Any
Condensation drainage holes	None
Mode	S1
Motor bearing	Ball bearing
Technical features	- Output 10 VDC, max. 10 mA - Locked-rotor detection - Tach output - Speed control - Power limiter - Motor current limitation - Soft start - Control input 0-10 VDC / PWM - Control interface with SELV potential safely disconnected from the mains - Overvoltage detection - Thermal overload protection for electronics/motor - Line undervoltage detection
Touch current according to IEC 60990 (measuring circuit Fig. 4, TN system)	<= 3.5 mA
Motor protection	Electronic motor protection
With cable	Variable
Protection class assignment	I; If a protective earth is connected by the customer This component for installation may have several local protection classes. This information relates to this component's basic design. The final protection class is based on the component's intended installation and connection.
Conformity with standards	EN 60335-1; EN 60034-1; EN 60204-1; CE; UKCA
Approval	CSA C22.2 No. 77 + CAN/CSA-E60730-1; UL 1004-7 + 60730-1

EC axial panel fan - AxiEco

with guard grille

Product drawing

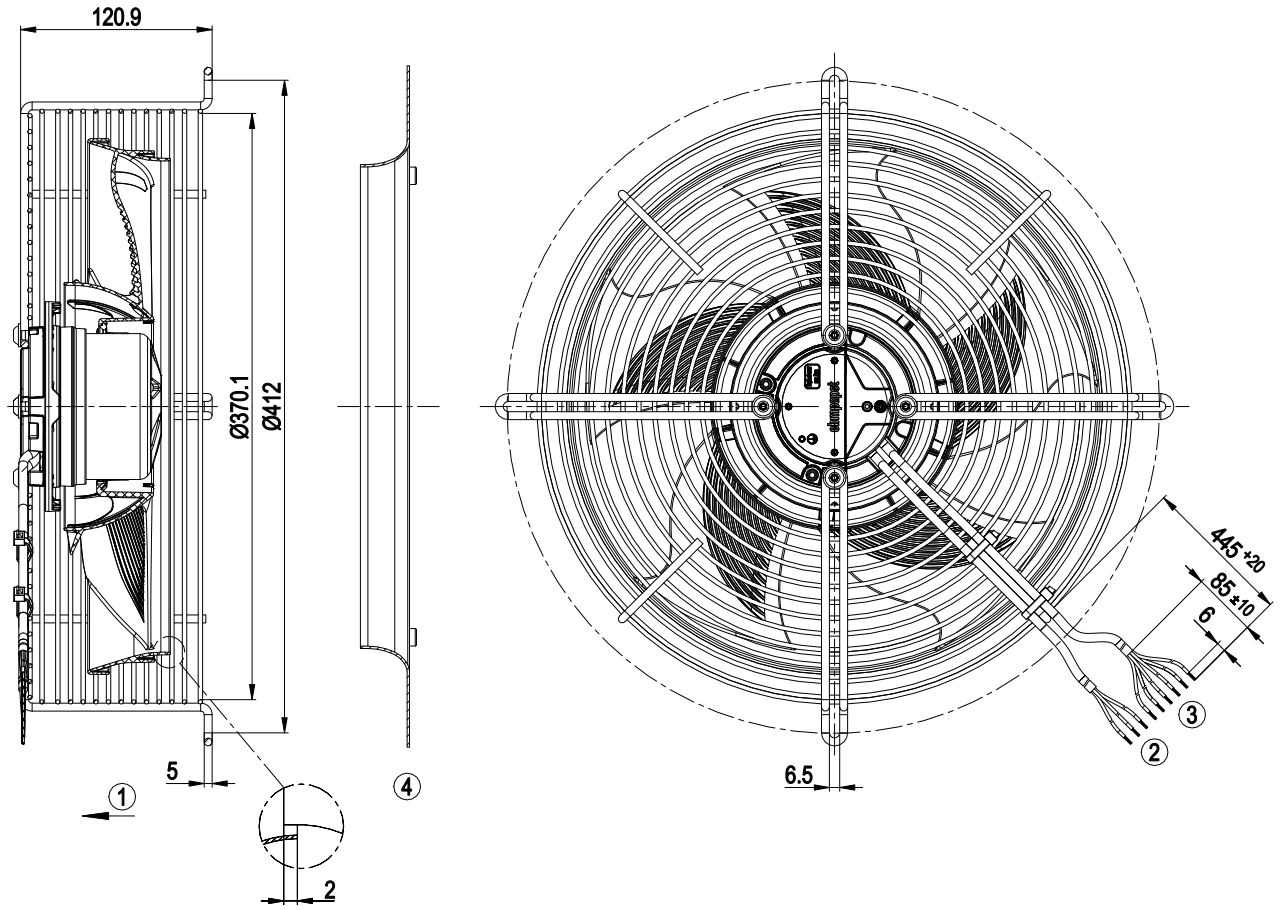

1	Airflow direction "V"
2	Supply line (PWR) PVC AWG20
	3x splice
3	Control wire (CTRL) PVC AWG22
	6x splice
4	Accessory part: Inlet ring 30100-2-4013 not included in scope of delivery

EC axial panel fan - AxiEco

with guard grille

Accessory part

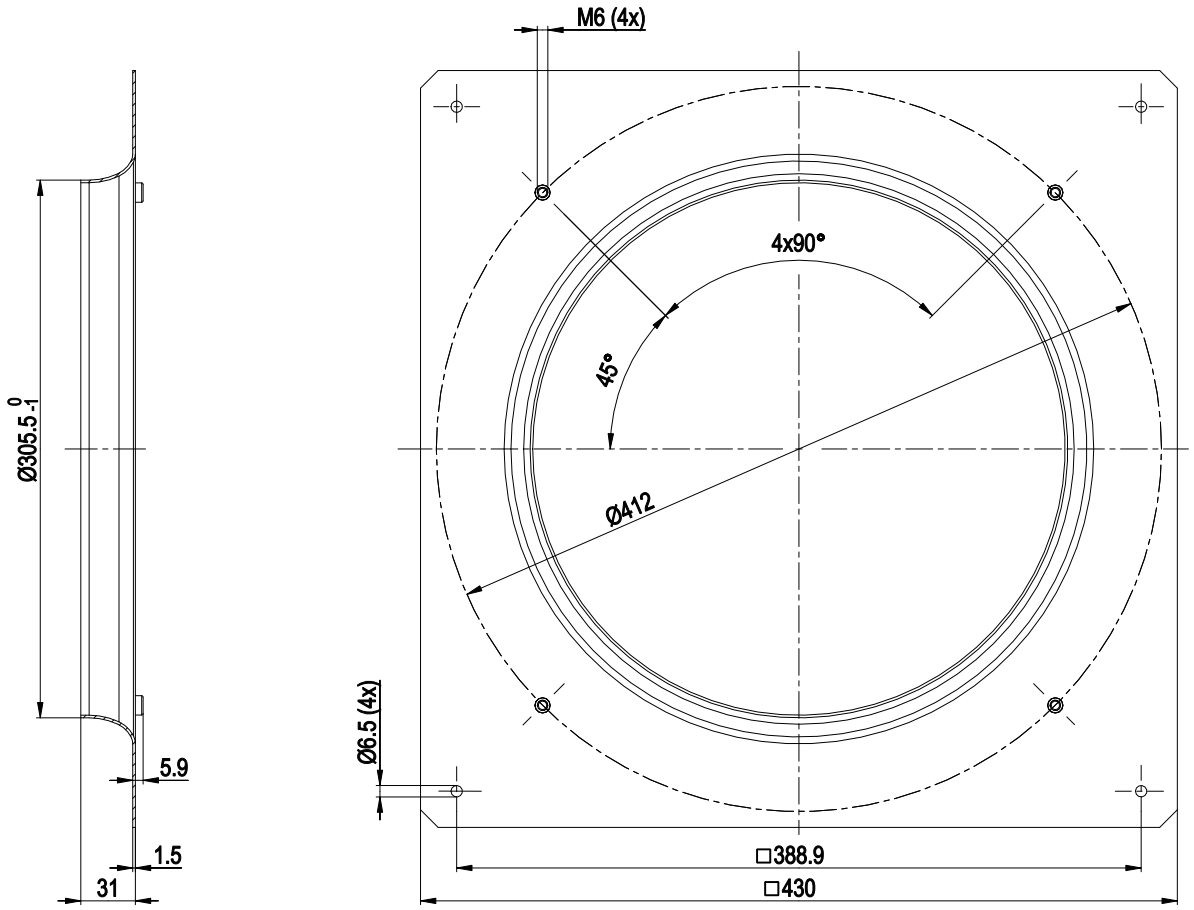

Inlet ring 30100-2-4013

EC axial panel fan - AxiEco

with guard grille

Connection diagram

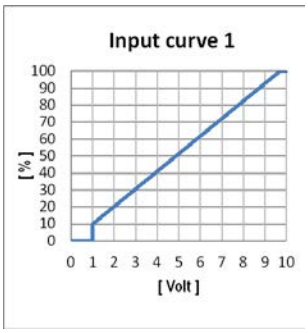

No.	Conn.	Designation	Color	Function/assignment
	PWR	L	black	Power supply, phase, see nameplate for voltage range
	PWR	N	blue	Power supply, neutral conductor, see nameplate for voltage range
	PWR	PE	green/yellow	Protective earth
	CTRL	GND	blue	Reference ground for control interface, SELV
	CTRL	IO1	yellow	Factory setting: Analog input 0-10 V/PWM, Ri=100 KΩ, fPWM=1 kHz..10 kHz, Function: Speed set value Characteristic curve parameterizable (see "Input curve 1"), SELV Function parameterizable at the factory (see Optional interface functions table)
	CTRL	IO2	white	Factory setting: Open collector output, Umax=50 VDC, Imax= 10 mA, function: Tach output 1 pulse/revolution, SELV Function parameterizable at factory (see table Optional interface functions)
	CTRL	Vout	red	Voltage output 10 VDC +/-3%, Imax=10 mA Short-circuit-proof, power supply for external devices, SELV
	CTRL	-	gray	No function
	CTRL	-	brown	No function

Terminal/plug assignment

Basic (B4)

Factory configuration option upon request

○ *Factory configuration option*

	configurable IO mode	electrical specification	INPUT				OUTPUT				
			source: set value	switch: parameter set: #1 / #2	switch: direction of rotation: cw / ccw	switch: enable/disable input	configurable function	signal: tach out	signal: diagnostics out	signal: alarm out	signal: run monitoring	signal: status	signal: configurable function
IO1	○ Din1 (high active): digital input	active: parameterizable voltage x-30 VDC not active: pin open or parameterizable voltage <x VDC, SELV		○	○	○	○						
	○ Ain1 0-10 V/PWM: analog input	Ri = 100 kΩ, characteristic curve parameterizable, f_{PWM} = 1k..10 kHz, SELV	○				○						
IO2	○ Tach out (open collector)	Umax=50 VDC, Imax=10 mA, SELV						○					
	○ Diagnostics out (open collector)	Umax=50 VDC, Imax=10 mA, SELV							○				
	○ Alarm out (open collector)	Umax=50 VDC, Imax=10 mA, SELV								○			
	○ Open collector	Umax=50 VDC, Imax=10 mA, SELV									○	○	○
Vout	Voltage output	Voltage10 VDC, SELV											

8300101330

VMA0300CSNDS

EC axial panel fan - AxiEco

with guard grille

Curves: Air performance 50 Hz

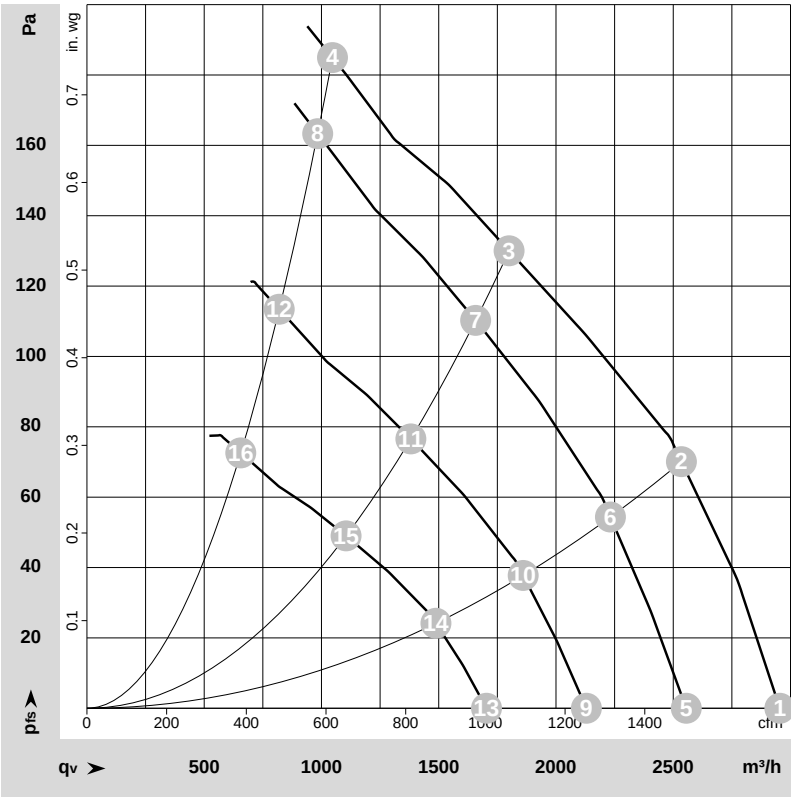

ρ = 1.15 kg/m³ ± 2 %

Measurement: LU-227739-1
Date: 2023-07-25
Nozzle: 30100-2-4013

Air performance measured according to ISO 5801 installation category A. For detailed information on the measurement setup, contact ebm-papst. Intake sound level: Sound power level according to ISO 13347 / sound pressure level measured at 1 m distance from fan axis. The values given are valid under the specified measuring conditions and may vary due to conditions of installation. For deviations from the standard configuration, the parameters have to be checked on the installed unit.

Measured values

	Wired	U	f	n	P_e	I	LpA_{in}	LwA_{in}	q_V	p_{fs}	q_V	p_{fs}
		V	Hz	min^{-1}	W	A	dB(A)	dB(A)	m^3/h	Pa	cfm	in. wg
1	1~	230	50	2080	148	1.25	66	73	2955	0	1740	0.00
2	1~	230	50	2045	169	1.41	62	69	2535	70	1490	0.28
3	1~	230	50	1955	169	1.42	60	67	1800	130	1060	0.52
4	1~	230	50	1915	170	1.43	64	71	1045	185	615	0.74
5	1~	230	50	1800	95	0.81	63	69	2555	0	1505	0.00
6	1~	230	50	1800	115	0.96	59	65	2230	54	1315	0.22
7	1~	230	50	1800	132	1.11	58	65	1655	110	975	0.44
8	1~	230	50	1800	141	1.18	63	70	985	163	580	0.65
9	1~	230	50	1500	55	0.47	58	64	2130	0	1255	0.00
10	1~	230	50	1500	67	0.56	55	61	1860	38	1095	0.15
11	1~	230	50	1500	77	0.64	53	60	1380	77	815	0.31
12	1~	230	50	1500	82	0.68	58	65	820	113	485	0.45
13	1~	230	50	1200	28	0.24	53	59	1705	0	1005	0.00
14	1~	230	50	1200	34	0.29	49	55	1490	24	875	0.10
15	1~	230	50	1200	39	0.33	48	55	1105	49	650	0.20
16	1~	230	50	1200	42	0.35	53	60	655	73	385	0.29

Wired = Wiring · U = Voltage · f = Frequency · n = Speed (rpm) · P_e = Power consumption · I = Current draw · LpA_{in} = Sound pressure level intake side · LwA_{in} = Sound power level intake side
q_V = Air flow · p_{fs} = Pressure increase