8300100910

VBS0500CSPLS

EC centrifugal fan - RadiPac

backward-curved, single-intake

ebm-papst Mulfingen GmbH & Co. KGaA & Co. KG
Bachmühle 2 · D-74673 Mulfingen
Phone +49 7938 81-0
info1@de.fansco.com
www.fansco.com

Limited partnership · Headquarters Mulfingen
Amtsgericht (court of registration) Stuttgart · HRA 590344

General partner Elektrobau Mulfingen GmbH · Headquarters Mulfingen
Amtsgericht (court of registration) Stuttgart · HRB 590142

Nominal data

Item	**8300100910**
Motor	**E09001-55**

Phase		1~
Nominal voltage	VAC	230
Nominal voltage range	VAC	200 .. 240
Frequency	Hz	50/60
Method of obtaining data		ml
Speed (rpm)	min^{-1}	1110
Power consumption	W	400
Current draw	A	2.5
Min. ambient temperature	°C	-25
Max. ambient temperature	°C	55

ml = Max. load · me = Max. efficiency · fa = Free air · cs = Customer specification · ce = Customer equipment
Subject to change

Data according to Commission Regulation (EU) 327/2011 (prEN 17166)

		Actual	Req. 2015
01 Overall efficiency η_{es}	%	71.4	47.3
02 Measurement category		A	
03 Efficiency category		Static	
04 Efficiency grade N		86.1	62
05 Variable speed drive		Yes	

09 Power consumption P_{ed}	kW	0.4
09 Air flow q_v	m³/h	4255
09 Pressure increase p_{fs}	Pa	218
10 Speed (rpm) n	min^{-1}	1105
11 Specific ratio*		1.00

Data obtained at optimum efficiency level.

* Specific ratio = 1 + p_{fs} / 100 000 Pa

LU-224219

The efficiency values displayed for achieving conformity with the Ecodesign Regulation EU 327/2011 has been reached with defined air duct components (e.g. inlet rings).
The dimensions must be requested from ebm-papst. If other air conduction geometries are used on the installation side, the ebm-papst evaluation loses its validity/the conformity must be confirmed again.

The product does not fall within the scope of Regulation (EU) 2019/1781 due to the exception specified in Article 2 (2a) (motors completely integrated into a product).

Technical description

Weight	8.8 kg
Size	500 mm
Motor size	90
Rotor surface	Painted black
Electronics housing material	Die-cast aluminum
Impeller material	PP plastic
Number of blades	5
Direction of rotation	Clockwise, viewed toward rotor
Degree of protection	IP55
Insulation class	"F"
Moisture (F) / Environmental (H) protection class	H1 = Moist – occasional or constantly high level of humidity
Max. permitted ambient temp. for motor (transport/storage)	+80 °C
Min. permitted ambient temp. for motor (transport/storage)	-40 °C
Installation position	Shaft horizontal or rotor on bottom; rotor on top on request
Condensation drainage holes	On rotor side
Mode	S1
Motor bearing	Ball bearing
Technical features	- Output 10 VDC, max. 10 mA - Operation and alarm display with LED - Locked-rotor detection - Speed control - External 15-30 VDC input (parameterization) - Alarm relay - Configurable inputs/outputs (I/O) - Power limiter - MODBUS - Motor current limitation - PFC, passive - RS-485 MODBUS-RTU - Soft start - Control interface with SELV potential safely disconnected from the mains - Temperature derating - Thermal overload protection for electronics/motor - Line undervoltage / phase failure detection
Power Factor Correction (PFC)	Passive
Touch current according to IEC 60990 (measuring circuit Fig. 4, TN system)	<= 3.5 mA
Motor protection	Electronic motor protection
With cable	Lateral
Protection class assignment	I; If a protective earth is connected. The built-in component has several local protection class assignments. The final protection class is determined by the intended installation.
Conformity with standards	EN 60335-1; EN 61800-5-1; CE; UKCA
Approval	CSA C22.2 No. 77 + CAN/CSA-E60730-1; UL 1004-7 + 60730-1

ebm-papst Mulfingen GmbH & Co. KGaA & Co. KG · Bachmühle 2 · D-74673 Mulfingen · Phone +49 (0) 7938 81-0 · info1@de.fansco.com · www.fansco.com

EC centrifugal fan - RadiPac

backward-curved, single-intake

Product drawing

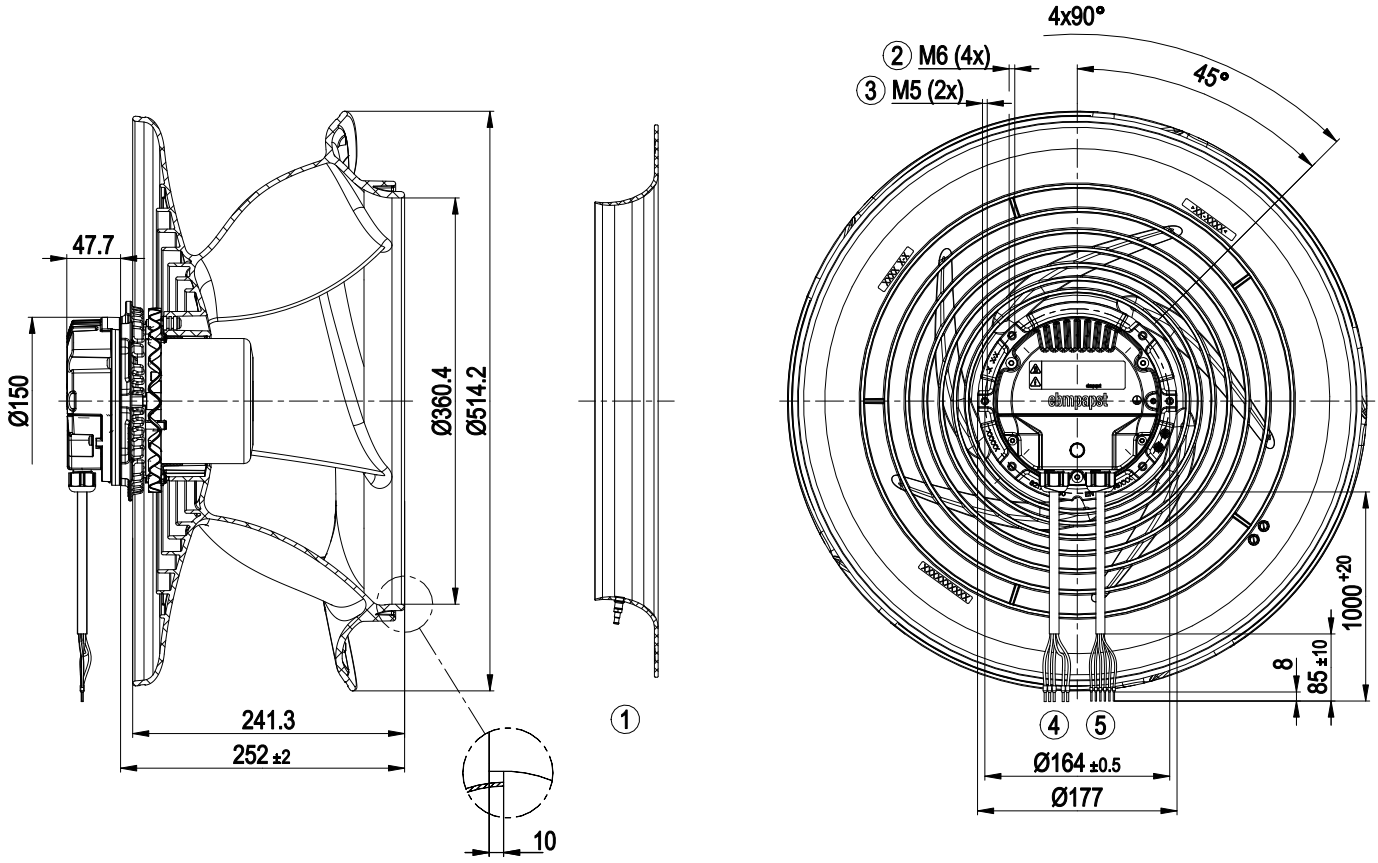

1	Accessory part: Inlet ring 8217102238 with pressure tap (k-factor: 290) (not included in scope of delivery)
2	Max. clearance for screw 10 mm
3	Max. clearance for screw 10 mm
	The M5 tapped holes (2x) can be used to attach hoisting equipment.
4	Supply line (PWR) PVC AWG18
	5x wire-end ferrule
5	Control wire (CTRL) PVC AWG22
	6x wire-end ferrule

ebm-papst Mulfingen GmbH & Co. KGaA & Co. KG · Bachmühle 2 · D-74673 Mulfingen · Phone +49 (0) 7938 81-0 · info1@de.fansco.com · www.fansco.com

Accessory part

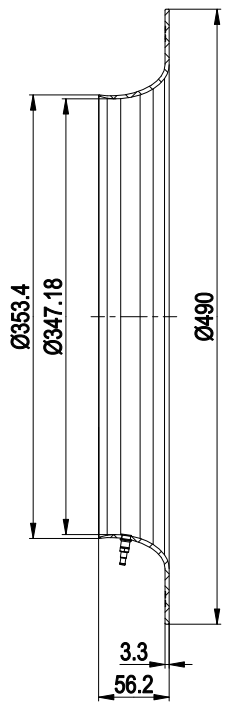

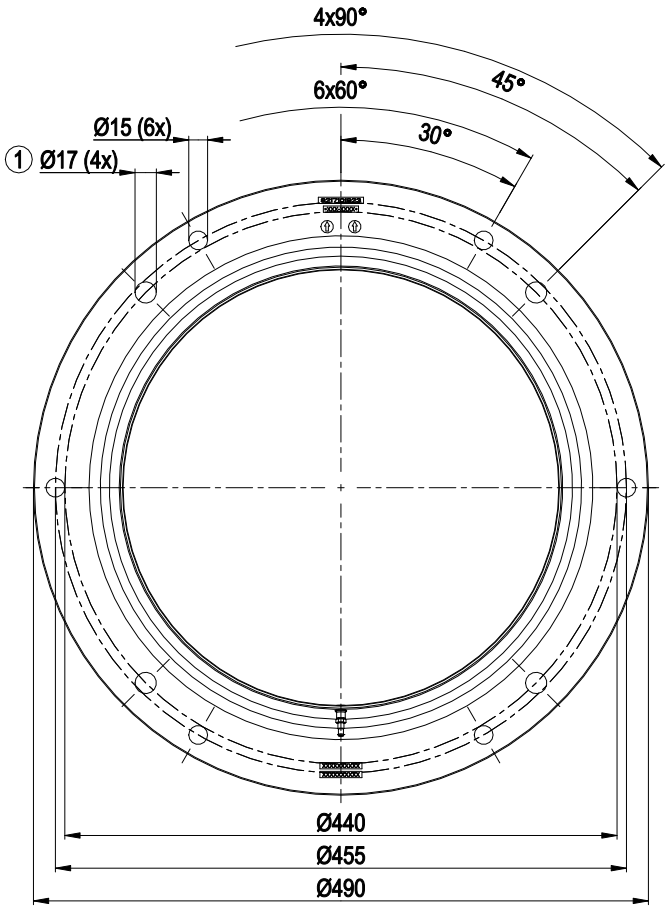

	Inlet ring 8217102238 with pressure tap (k-factor: 290)
1	Fastening holes for FlowGrid 35505-2-2957 (not included in scope of delivery) are provided and must be subsequently opened as required

ebm-papst Mulfingen GmbH & Co. KGaA & Co. KG · Bachmühle 2 · D-74673 Mulfingen · Phone +49 (0) 7938 81-0 · info1@de.fansco.com · www.fansco.com

Connection diagram

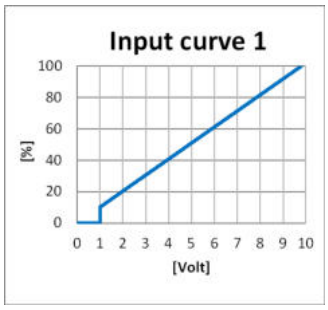

No.	Conn.	Designation	Color	Function/assignment
	PWR	PE	green/yellow	Protective earth
	PWR	L	black	Power supply, phase, see nameplate for voltage range
	PWR	N	blue	Power supply, neutral conductor, see nameplate for voltage range
	PWR	COM	orange	Status relay, floating status contact, common connection, contact rating 250 VAC / 2 A (AC1) / min. 10 mA, reinforced insulation on supply side and on control interface side
	PWR	NC	orange	Status relay, floating status contact, break for failure
	CTRL	GND	blue	Reference ground for control interface, SELV
	CTRL	Vout	red	Voltage output 10 VDC +/-3%, Imax=10 mA Short-circuit-proof, power supply for external devices, SELV alternative: 15-30 VDC input for parameterization via MODBUS without line voltage
	CTRL	IO1	yellow	Factory setting: Analog input 0-10 V / PWM, Ri=100 kΩ, function: set value Characteristic curve parameterizable (see input characteristic curve "Input curve 1"), SELV Function parameterizable (see table Optional interface functions)
	CTRL	IO2	white	Factory setting: Open collector output, Umax=50 VDC, Imax=20 mA, function:Tacho output 1 pulse/revolution, SELV Function parameterizable (see table Optional interface functions)
	CTRL	RSA	gray	RS-485 interface for MODBUS RSA, SELV dielectric strength to MODBUS RSB +/-14 V, dielectric strength to GND +/-7 V
	CTRL	RSB	brown	RS-485 interface for MODBUS RSB, SELV dielectric strength to MODBUS RSA +/-14 V, dielectric strength to GND +/-7 V
		LED		green: status = good, ready for operation orange: status = warning red: status = failure

ebm-papst Mulfingen GmbH & Co. KGaA & Co. KG · Bachmühle 2 · D-74673 Mulfingen · Phone +49 (0) 7938 81-0 · info1@de.fansco.com · www.fansco.com

Terminal/plug assignment

Medium (M2)

Functions and parameter description
MODBUS V7.1

○ *configurable function*
(○) *function to be activated via IO Mode*

	configurable IO mode	electrical specification	MODBUS Register for IO mode configuration	D101 [...] source: set value	D147 [...] source: sensor value	D104 [...] switch: parameter set: #1 / #2	D12E [...] switch: control function: heating (pos.) / cooling (neg.)	D148 [...] switch: direction of rotation: cw / ccw	D16C [...] switch: set value source	D16A [...] switch: fan enable / disable	D00C [1] source: input pulses autoaddressing	D638 [...] source: DCI in	selection direct via IO: signal: tach out	selection direct via IO: signal: diagnostics out	selection direct via IO: signal: alarm out	D130 [4] signal: output pulses autoaddressing	D61B signal: DCI out	D130 [0] signal: fan modulation level %	D130 [1] signal: actual speed 1/min	D130 [2] signal: system modulation level %	D130 [5] signal: remote control output 0-10 V	D145 signal: run monitoring	signal: status
	configurable IO functions: normal / inverse			INPUT									OUTPUT										
IO1	○ **Din1 (high active):** digital input	active: applied voltage 3.5 - 50 VDC not active: pin open or applied voltage < 1.5 VDC, SELV	D158 [0]			○	○	○	○	○	○	○											
IO1	○ **Din1 (low active):** digital input	active: applied voltage < 1.5 VDC not active: pin open or applied voltage 3.5 - 50 VDC, SELV	D158 [1]			○	○	○	○	○	○	○											
IO1	○ **Ain1 0-10 V/PWM:** analog input	Ri = 100 kΩ, characteristic curve parametrizable, f_{PWM} = 1 k - 10 kHz, SELV	D158 [2]	○	○																		
IO1	○ **Ain1 0-10 V/PWM (with pull up):** analog input	Ri = 100 kΩ, characteristic curve parametrizable, f_{PWM} = 1 k - 10 kHz, SELV	D158 [9]	○	○																		
IO2	○ **Din1 (active high):** digital input	active: applied voltage 3.5 - 50 VDC not active: pin open or applied voltage < 1.5 VDC, SELV	D159 [0]			○	○	○	○	○													
IO2	○ **Ain1 0-10 V/PWM:** analog input	Ri = 100 kΩ, characteristic curve parametrizable, f_{PWM} = 1 k - 10 kHz, SELV	D159 [2]	○	○																		
IO2	○ **Tach out** (open collector)	Umax = 50 VDC, Imax = 20 mA, SELV	D159 [5]										(○)										
IO2	○ **Diagnostics out** (open collector)	Umax = 50 VDC, Imax = 20 mA, SELV	D159 [6]											(○)									
IO2	○ **Alarm out** (open collector)	Umax = 50 VDC, Imax = 20 mA, SELV	D159 [10]												(○)								
IO2	○ **Autoadressing pulse output** (open collector)	Umax = 50 VDC, Imax = 20 mA, SELV	D159 [11]													(○)							
IO2	○ **DCI-output** (open collector)	Umax = 50 VDC, Imax = 20 mA, SELV	D159 [12]														(○)						
RSA RSB	**RS485 bus connection**	MODBUS RTU, parameter specification V7.1, SELV		○		○	○	○	○	○													
COM NC	**Relay**	250 VAC / 2 A (AC1)																				○	○
Vout	**Voltage output**	Voltage 10 VDC, SELV																					
Vout	**Alternatively:** Input auxiliary power supply for parameterization via RS485/MODBUS RTU without line voltage	15 - 30 VDC																					

ebmpapst Mulfingen GmbH & Co. KGaA & Co. KG · Bachmühle 2 · D-74673 Mulfingen · Phone +49 (0) 7938 81-0 · info1@de.fansco.com · www.fansco.com

8300100910

VBS0500CSPLS

EC centrifugal fan - RadiPac

backward-curved, single-intake

Curves: Air performance 50 Hz

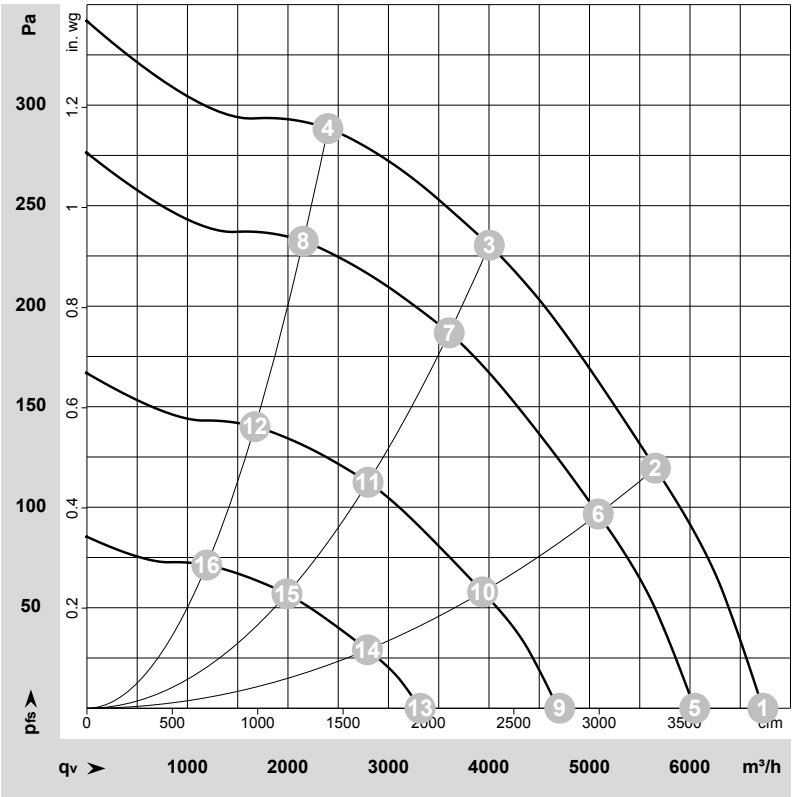

ρ = 1.15 kg/m³ ± 2 %

Measurement: LU-224219-1
Date: 2022-11-30
Nozzle: 8217101923

Air performance measured according to ISO 5801 installation category A. For detailed information on the measurement setup, contact ebm-papst. Intake sound level: Sound power level according to ISO 13347 / sound pressure level measured at 1 m distance from fan axis. The values given are valid under the specified measuring conditions and may vary due to conditions of installation. For deviations from the standard configuration, the parameters have to be checked on the installed unit.

Measured values

	Wired	U	f	n	P_e	I	LpA_{in}	LwA_{in}	LwA_{out}	LwA	q_V	p_{fs}	q_V	p_{fs}
		V	Hz	min^{-1}	W	A	dB(A)	dB(A)	dB(A)	dB	m^3/h	Pa	cfm	in. wg
1	1~	230	50	1110	269	1.71	67	74	78	80	6725	0	3960	0.00
2	1~	230	50	1110	353	2.20	61	69	73	74	5655	120	3330	0.48
3	1~	230	50	1110	400	2.50	55	62	67	68	4005	230	2355	0.92
4	1~	230	50	1110	367	2.28	56	63	68	69	2400	290	1410	1.16
5	1~	230	50	995	197	1.29	64	72	76	77	6045	0	3560	0.00
6	1~	230	50	995	258	1.65	58	66	70	72	5085	97	2995	0.39
7	1~	230	50	995	294	1.86	53	60	64	66	3605	187	2120	0.75
8	1~	230	50	995	266	1.70	54	60	65	66	2150	233	1265	0.94
9	1~	230	50	775	98	0.69	60	67	71	73	4705	0	2770	0.00
10	1~	230	50	775	125	0.85	54	61	65	67	3935	58	2315	0.23
11	1~	230	50	775	141	0.96	47	54	59	60	2795	113	1645	0.45
12	1~	230	50	775	129	0.88	47	54	58	60	1670	140	985	0.56
13	1~	230	50	555	41	0.32	50	58	65	65	3315	0	1950	0.00
14	1~	230	50	555	50	0.38	43	51	58	59	2790	29	1640	0.12
15	1~	230	50	555	56	0.42	39	46	53	54	1990	57	1170	0.23
16	1~	230	50	555	52	0.39	38	45	50	51	1190	71	700	0.29

Wired = Wiring · U = Voltage · f = Frequency · n = Speed (rpm) · P_e = Power consumption · I = Current draw · LpA_{in} = Sound pressure level intake side · LwA_{in} = Sound power level intake side
LwA_{out} = Sound power level outlet side · q_V = Air flow · p_{fs} = Pressure increase

ebm-papst Mulfingen GmbH & Co. KGaA & Co. KG · Bachmühle 2 · D-74673 Mulfingen · Phone +49 (0) 7938 81-0 · info1@de.fansco.com · www.fansco.com