8300100799

VWT0400CTPFS

EC axial panel fan - AxiEco

Fan housing with guard grille

ebm-papst Mulfingen GmbH & Co. KG
Bachmühle 2 · D-74673 Mulfingen
Phone +49 7938 81-0
Fax +49 7938 81-110
info1@de.fansco.com
www.fansco.com

Limited partnership · Headquarters Mulfingen
Amtsgericht (court of registration) Stuttgart · HRA 590344

General partner Elektrobau Mulfingen GmbH · Headquarters Mulfingen
Amtsgericht (court of registration) Stuttgart · HRB 590142

Nominal data

Item	**8300100799**
Motor	**E09004-28**

Phase		3~
Nominal voltage	VAC	400
Nominal voltage range	VAC	380 .. 480
Frequency	Hz	50/60
Method of obtaining data		ml
Status		prelim.
Speed (rpm)	min^{-1}	2370
Power consumption	W	950
Current draw	A	1.5
Max. back pressure	Pa	440
Max. back pressure	in. wg	1.77
Min. ambient temperature	°C	-40
Max. ambient temperature	°C	60

ml = Max. load · me = Max. efficiency · fa = Free air · cs = Customer specification · ce = Customer equipment
Subject to change

Data according to Commission Regulation (EU) 327/2011 (prEN 17166)

		Actual	Req. 2015
01 Overall efficiency η_{es}	%	51.8	33.6
02 Measurement category		A	
03 Efficiency category		Static	
04 Efficiency grade N		58.2	40
05 Variable speed drive		Yes	

09 Power consumption P_{ed}	kW	0.96
09 Air flow q_v	m³/h	4245
09 Pressure increase p_{fs}	Pa	390
10 Speed (rpm) n	min^{-1}	2375
11 Specific ratio*		1.00

Data obtained at optimum efficiency level.

* Specific ratio = 1 + p_{fs} / 100 000 Pa

LU-232992

The efficiency values displayed for achieving conformity with the Ecodesign Regulation EU 327/2011 has been reached with defined air duct components (e.g. inlet rings).
The dimensions must be requested from ebm-papst. If other air conduction geometries are used on the installation side, the ebm-papst evaluation loses its validity/the conformity must be confirmed again.

The product does not fall within the scope of Regulation (EU) 2019/1781 due to the exception specified in Article 2 (2a) (motors completely integrated into a product).

EC axial panel fan - AxiEco

Fan housing with guard grille

Technical description

Size	400 mm
Motor size	90
Rotor surface	Painted black
Terminal box material	PA plastic
Electronics housing material	Die-cast aluminum, painted gray
Impeller material	PP plastic
Fan housing material	PP plastic
Inlet ring material	ABS plastic
Number of blades	5
Airflow direction	V
Direction of rotation	Clockwise, viewed toward rotor
Degree of protection	IP55
Insulation class	"F"
Moisture (F) / Environmental (H) protection class	H2
Ambient temperature note	Occasional start-up at temperatures between -40°C and -25°C is permitted. For continuous operation at ambient temperatures below -25°C (such as refrigeration applications), use must be made of a fan design with special low-temperature bearings.
Max. permitted ambient temp. for motor (transport/storage)	+80 °C
Min. permitted ambient temp. for motor (transport/storage)	-40 °C
Installation position	Shaft horizontal or rotor on bottom; rotor on top on request
Condensation drainage holes	On rotor side
Mode	S1
Motor bearing	Ball bearing
Technical features	- Locked-rotor detection - Speed control - Alarm relay - Power limiter - Motor current limitation - Soft start - Control interface with SELV potential safely disconnected from the mains - Temperature derating - Thermal overload protection for electronics/motor - Line undervoltage / phase failure detection
Touch current according to IEC 60990 (measuring circuit Fig. 4, TN system)	<= 3.5 mA
Electrical hookup	Terminal box
Motor protection	Electronic motor protection
Protection class assignment	I; If a protective earth is connected by the customer This component for installation may have several local protection classes. This information relates to this component's basic design. The final protection class is based on the component's intended installation and connection.
Conformity with standards	EN 61800-5-1

ebm-papst Mulfingen GmbH & Co. KG · Bachmühle 2 · D-74673 Mulfingen · Phone +49 (0) 7938 81-0 · Fax +49 (0) 7938 81-110 ·sales@fansco.com · www.fansco.com

8300100799

VWT0400CTPFS

EC axial panel fan - AxiEco

Fan housing with guard grille

Product drawing

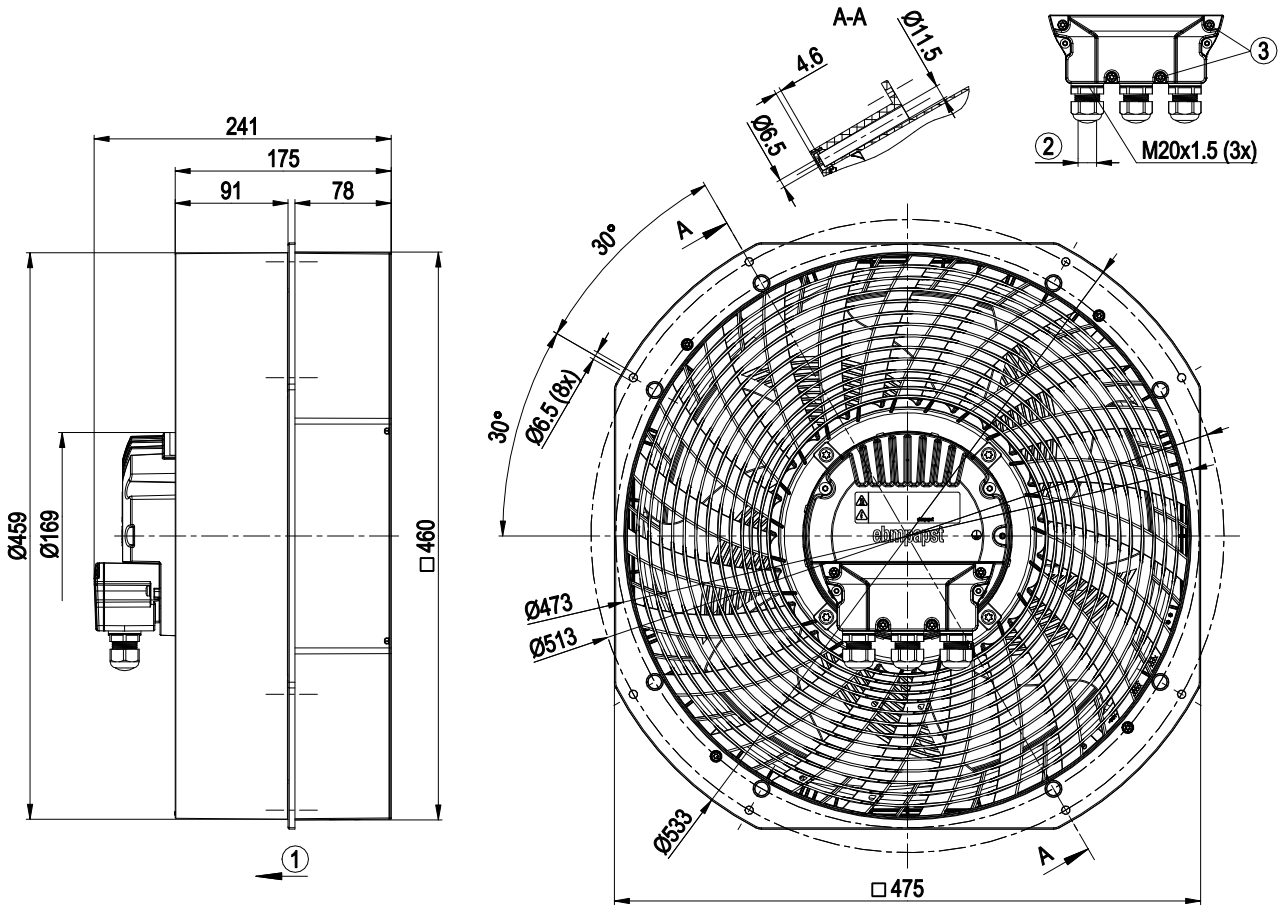

1	Airflow direction "V"
2	Cable diameter min. 4 mm, max. 10 mm, tightening torque 4 ± 0.6 Nm
	(The tightening torque is designed for PVC cables. If the cable materials are different, the tightening torque may have to be adjusted)
3	Tightening torque 2±0.3 Nm
	Accessory part: Guard grill 40070-2-4039 with oval head screw 60080-7-6201 (4x), can be fitted on the intake side. Not included in scope of delivery.
	The installation of accessories may change the air performance and noise values.

ebm-papst Mulfingen GmbH & Co. KG · Bachmühle 2 · D-74673 Mulfingen · Phone +49 (0) 7938 81-0 · Fax +49 (0) 7938 81-110 ·sales@fansco.com · www.fansco.com

EC axial panel fan - AxiEco

Fan housing with guard grille

Accessory part

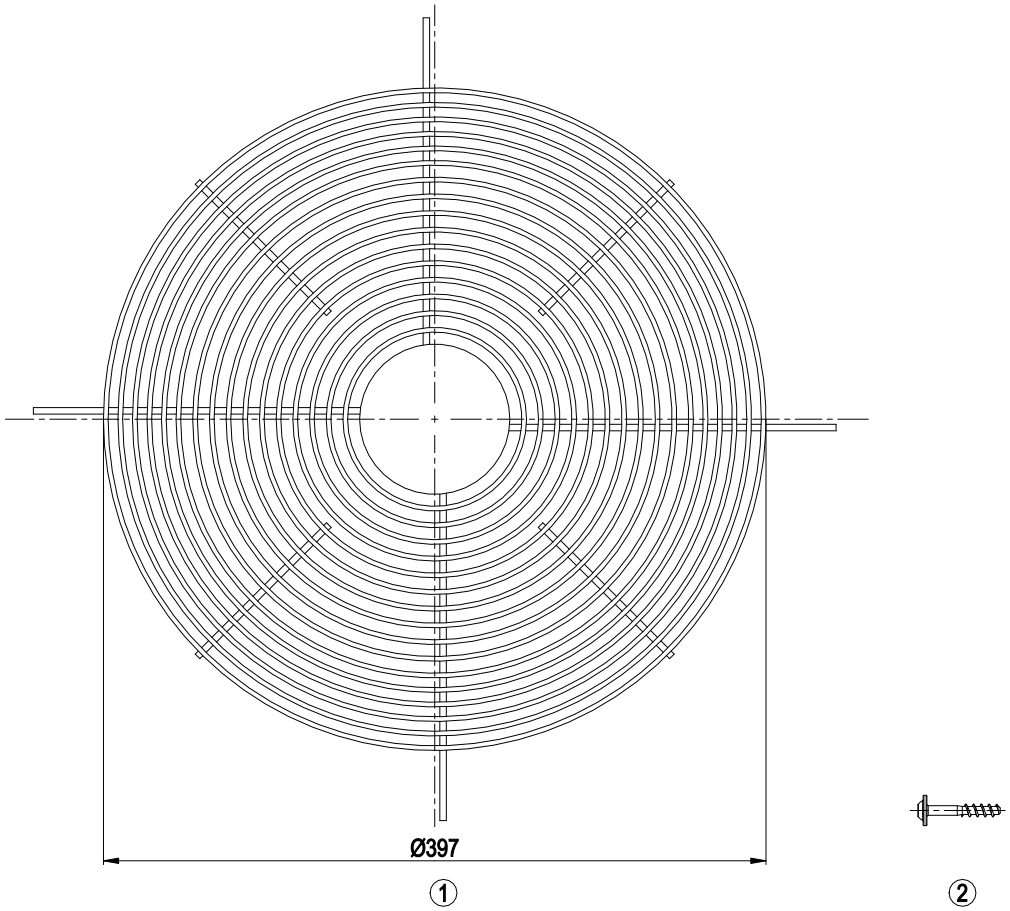

1	Guard grill 40070-2-4039
2	Oval head screw 60080-7-6201 (4x)

ebm-papst Mulfingen GmbH & Co. KG · Bachmühle 2 · D-74673 Mulfingen · Phone +49 (0) 7938 81-0 · Fax +49 (0) 7938 81-110 ·sales@fansco.com · www.fansco.com

EC axial panel fan - AxiEco

Fan housing with guard grille

Mounting dimensions

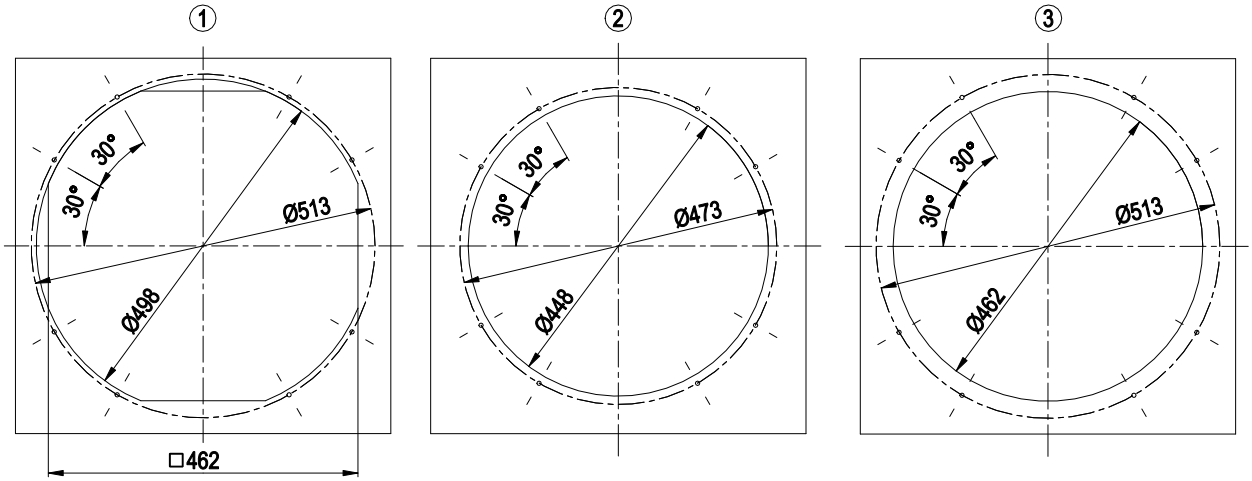

	All 8 holes on the relevant pitch circle must always be used for all types of fastening.
1	intake-side mounting on flange
2	intake-side mounting on suction nozzle
	The Ø6.5 mm holes must be pierced from the underside with a mandrel or similar tool.
	We recommend using M6 cheese-head screws with hexagon socket (DIN 912/DIN EN ISO 4762) for fastening.
3	outlet-side mounting on flange

ebm-papst Mulfingen GmbH & Co. KG · Bachmühle 2 · D-74673 Mulfingen · Phone +49 (0) 7938 81-0 · Fax +49 (0) 7938 81-110 ·sales@fansco.com · www.fansco.com

EC axial panel fan - AxiEco

Fan housing with guard grille

Connection diagram

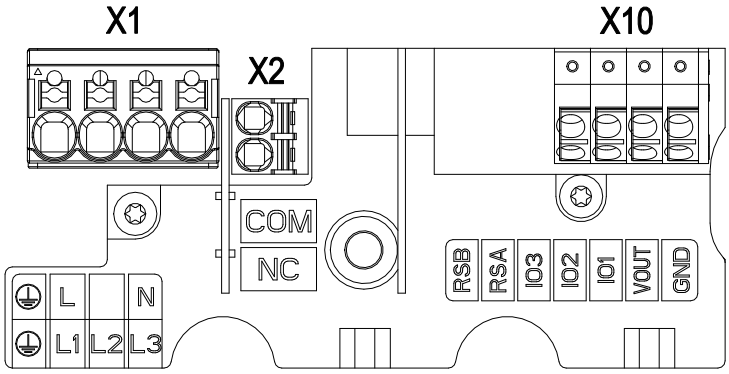

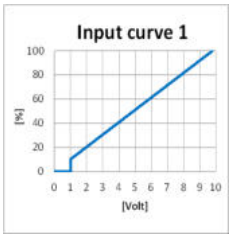

No.	Conn.	Designation	Function/assignment
X1	PWR	PE	Protective earth
X1	PWR	L1, L2, L3	Power supply, phase, see nameplate for voltage range
X2	CTRL	COM	Status relay, floating status contact, common connection, contact rating 250 VAC / 2 A (AC1) / min. 10 mA, reinforced insulation on supply side and on control interface side
X2	CTRL	NC	Status relay, floating status contact, break for failure
X10	CTRL	GND	Reference ground for control interface, SELV
X10	CTRL	Vout	Voltage output 10 VDC +/-3%, Imax=10 mA Short-circuit-proof, power supply for external devices, SELV
X10	CTRL	IO1	Factory setting: Analog input 0-10 V / PWM, Ri=100 kΩ, function: set value Characteristic curve parameterizable (see input characteristic curve "Input curve 1"), SELV Function parameterizable at the factory (see table Optional interface functions)
X10	CTRL	IO2	Factory setting: Open collector output, Umax=50 VDC, Imax=20 mA, function:Tacho output 1 pulse/revolution, SELV Function parameterizable at factory (see table Optional interface functions)

ebm-papst Mulfingen GmbH & Co. KG · Bachmühle 2 · D-74673 Mulfingen · Phone +49 (0) 7938 81-0 · Fax +49 (0) 7938 81-110 ·sales@fansco.com · www.fansco.com

EC axial panel fan - AxiEco

Fan housing with guard grille

Terminal/plug assignment

Basic (B5)

Factory configuration option upon request

○ *Factory configuration option*

	configurable IO mode	electrical specification	INPUT					OUTPUT					
			source: set value	switch: parameter set: #1 / #2	switch: direction of rotation: cw / ccw	switch: enable/disable input	configurable function	signal: tach out	signal: diagnostics out	signal: alarm out	signal: run monitoring	signal: status	signal: configurable function
IO1	○ **Din1 (high active):** digital input	active: parameterizable voltage x-30 VDC not active: pin open or parameterizable voltage <x VDC, SELV		○	○	○	○						
	○ **Ain1 0-10 V/PWM:** analog input	Ri = 100 kΩ, characteristic curve parameterizable, f_{PWM} = 1k..10 kHz, SELV	○										
IO2	○ **Tach out** (open collector)	Umax=50 VDC, Imax=10 mA, SELV						○					
	○ **Diagnostics out** (open collector)	Umax=50 VDC, Imax=10 mA, SELV							○				
	○ **Alarm out** (open collector)	Umax=50 VDC, Imax=10 mA, SELV								○			
	○ **Open collector**	Umax=50 VDC, Imax=10 mA, SELV											○
COM NC	Relais	250 VAC / 2 A (AC1)									○	○	○
Vout	Voltage output	Voltage10 VDC, SELV											

ebm-papst Mulfingen GmbH & Co. KG · Bachmühle 2 · D-74673 Mulfingen · Phone +49 (0) 7938 81-0 · Fax +49 (0) 7938 81-110 ·sales@fansco.com · www.fansco.com

8300100799

VWT0400CTPFS

EC axial panel fan - AxiEco

Fan housing with guard grille

Curves: Air performance 50 Hz

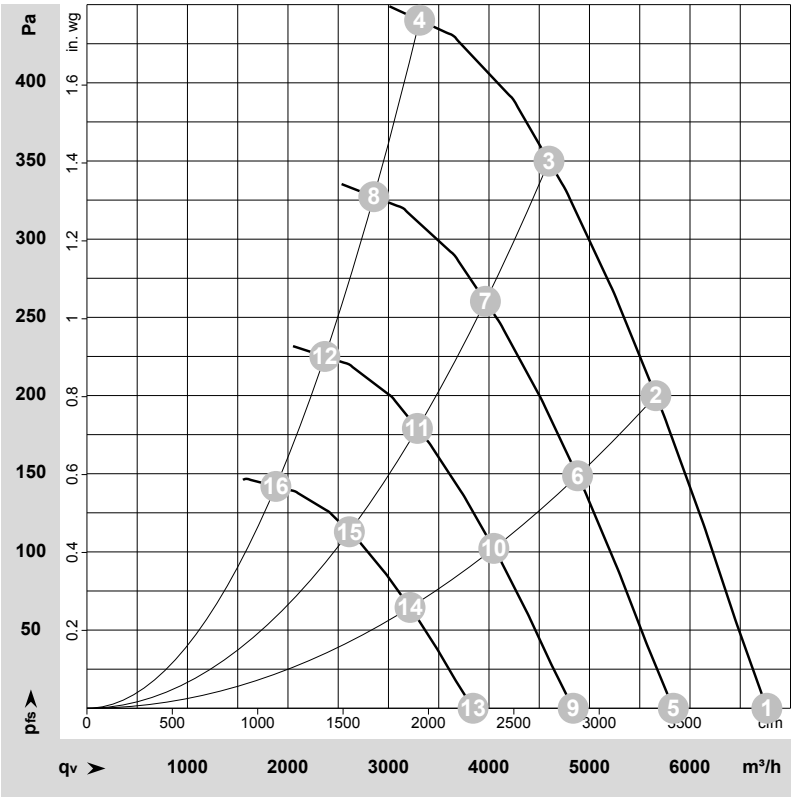

ρ = 1.15 kg/m³ ± 2 %

Measurement: LU-232992-1
Date: 2024-07-23
Housing: 40001-2-2910
Nozzle: 40000-2-2943

Air performance measured according to ISO 5801 installation category A. For detailed information on the measurement setup, contact ebm-papst. Intake sound level: Sound power level according to ISO 13347 / sound pressure level measured at 1 m distance from fan axis. The values given are valid under the specified measuring conditions and may vary due to conditions of installation. For deviations from the standard configuration, the parameters have to be checked on the installed unit.

Measured values

	Wired	U	f	n	P_e	I	LpA_{in}	LwA_{in}	LwA_{out}	LwA	q_V	p_{fs}	q_V	p_{fs}
		V	Hz	min^{-1}	W	A	dB(A)	dB(A)	dB(A)	dB	m^3/h	Pa	cfm	in. wg
1	3~	400	50	2375	765	1.20	77	83	85	87	6765	0	3980	0.00
2	3~	400	50	2375	890	1.38	74	80	82	85	5660	200	3330	0.80
3	3~	400	50	2375	950	1.47	74	81	83	85	4595	350	2705	1.41
4	3~	400	50	2375	944	1.46	77	84	87	88	3310	440	1950	1.77
5	3~	400	50	2050	491	0.77	73	79	82	84	5835	0	3435	0.00
6	3~	400	50	2050	571	0.89	70	77	79	81	4880	149	2875	0.60
7	3~	400	50	2050	609	0.94	70	77	80	81	3965	260	2335	1.04
8	3~	400	50	2050	606	0.94	74	80	83	85	2855	327	1680	1.31
9	3~	400	50	1700	280	0.44	68	75	77	79	4840	0	2850	0.00
10	3~	400	50	1700	326	0.51	65	72	74	76	4050	102	2385	0.41
11	3~	400	50	1700	348	0.54	65	72	75	77	3290	179	1935	0.72
12	3~	400	50	1700	345	0.54	69	75	78	80	2365	225	1395	0.90
13	3~	400	50	1350	140	0.22	63	69	71	73	3840	0	2260	0.00
14	3~	400	50	1350	163	0.25	60	66	68	70	3215	64	1890	0.26
15	3~	400	50	1350	174	0.27	60	66	69	71	2610	113	1535	0.45
16	3~	400	50	1350	173	0.27	63	70	72	74	1880	142	1105	0.57

Wired = Wiring · U = Voltage · f = Frequency · n = Speed (rpm) · P_e = Power consumption · I = Current draw · LpA_{in} = Sound pressure level intake side · LwA_{in} = Sound power level intake side
LwA_{out} = Sound power level outlet side · q_V = Air flow · p_{fs} = Pressure increase

ebm-papst Mulfingen GmbH & Co. KG · Bachmühle 2 · D-74673 Mulfingen · Phone +49 (0) 7938 81-0 · Fax +49 (0) 7938 81-110 ·sales@fansco.com · www.fansco.com