8300100080

VWT0350CSLFS

EC axial panel fan - AxiEco

Fan housing with guard grille

ebm-papst Mulfingen GmbH & Co. KG
Bachmühle 2 · D-74673 Mulfingen
Phone +49 7938 81-0
Fax +49 7938 81-110
info1@de.fansco.com
www.fansco.com

Limited partnership · Headquarters Mulfingen
Amtsgericht (court of registration) Stuttgart · HRA 590344

General partner Elektrobau Mulfingen GmbH · Headquarters Mulfingen
Amtsgericht (court of registration) Stuttgart · HRB 590142

Nominal data

Item	**8300100080**
Motor	**E06001-30 (M3G060-DA)**

Phase		1~
Nominal voltage	VAC	230
Nominal voltage range	VAC	200 .. 240
Frequency	Hz	50/60
Method of obtaining data		ml
Status		prelim.
Speed (rpm)	min^{-1}	1075
Power consumption	W	68
Current draw	A	0.59
Max. back pressure	Pa	75
Max. back pressure	in. wg	0.3
Min. ambient temperature	°C	-25
Max. ambient temperature	°C	60

ml = Max. load · me = Max. efficiency · fa = Free air · cs = Customer specification · ce = Customer equipment
Subject to change

EC axial panel fan - AxiEco

Fan housing with guard grille

Technical description

Weight	3,52
Size	350 mm
Motor size	60
Rotor surface	Thick-film passivated
Impeller material	PP plastic
Fan housing material	PP plastic
Number of blades	5
Airflow direction	V
Direction of rotation	Clockwise, viewed toward rotor
Degree of protection	IP54
Insulation class	"B"
Moisture (F) / Environmental (H) protection class	H1
Max. permitted ambient temp. for motor (transport/storage)	+ 80 °C
Min. permitted ambient temp. for motor (transport/storage)	- 40 °C
Installation position	Any
Condensation drainage holes	None, open rotor
Mode	S1
Motor bearing	Ball bearing
Technical features	- Output 10 VDC, max. 1.1 mA - Locked-rotor detection - Tach output - Speed control - Power limiter - Motor current limitation - Soft start - Control input 0-10 VDC / PWM - Control interface with SELV potential safely disconnected from the mains - Overvoltage detection - Thermal overload protection for electronics/motor - Line undervoltage detection
Touch current according to IEC 60990 (measuring circuit Fig. 4, TN system)	<= 3.5 mA
Motor protection	Electronic motor protection
With cable	Variable
Protection class assignment	I; If a protective earth is connected. The built-in component has several local protection class assignments. The final protection class is determined by the intended installation.
Safety class of the permissible refrigerants according to EN378 / ISO5149-1	A3/B3
Maximum surface temperature	240 °C
Conformity with standards	EN 60034-1; EN 60204-1; EN 60335-1; EN 60335-2-24; EN 60335-2-40; EN 60335-2-89; CE; UKCA
Comment on CE	Ecodesign Directive 2009/125/EC + Fan Directive (EC) No. 327/2011 does not apply, as power consumption <125W.

ebm-papst Mulfingen GmbH & Co. KG · Bachmühle 2 · D-74673 Mulfingen · Phone +49 (0) 7938 81-0 · Fax +49 (0) 7938 81-110 · info1@de.fansco.com · www.fansco.com

8300100080

VWT0350CSLFS

EC axial panel fan - AxiEco

Fan housing with guard grille

Product drawing

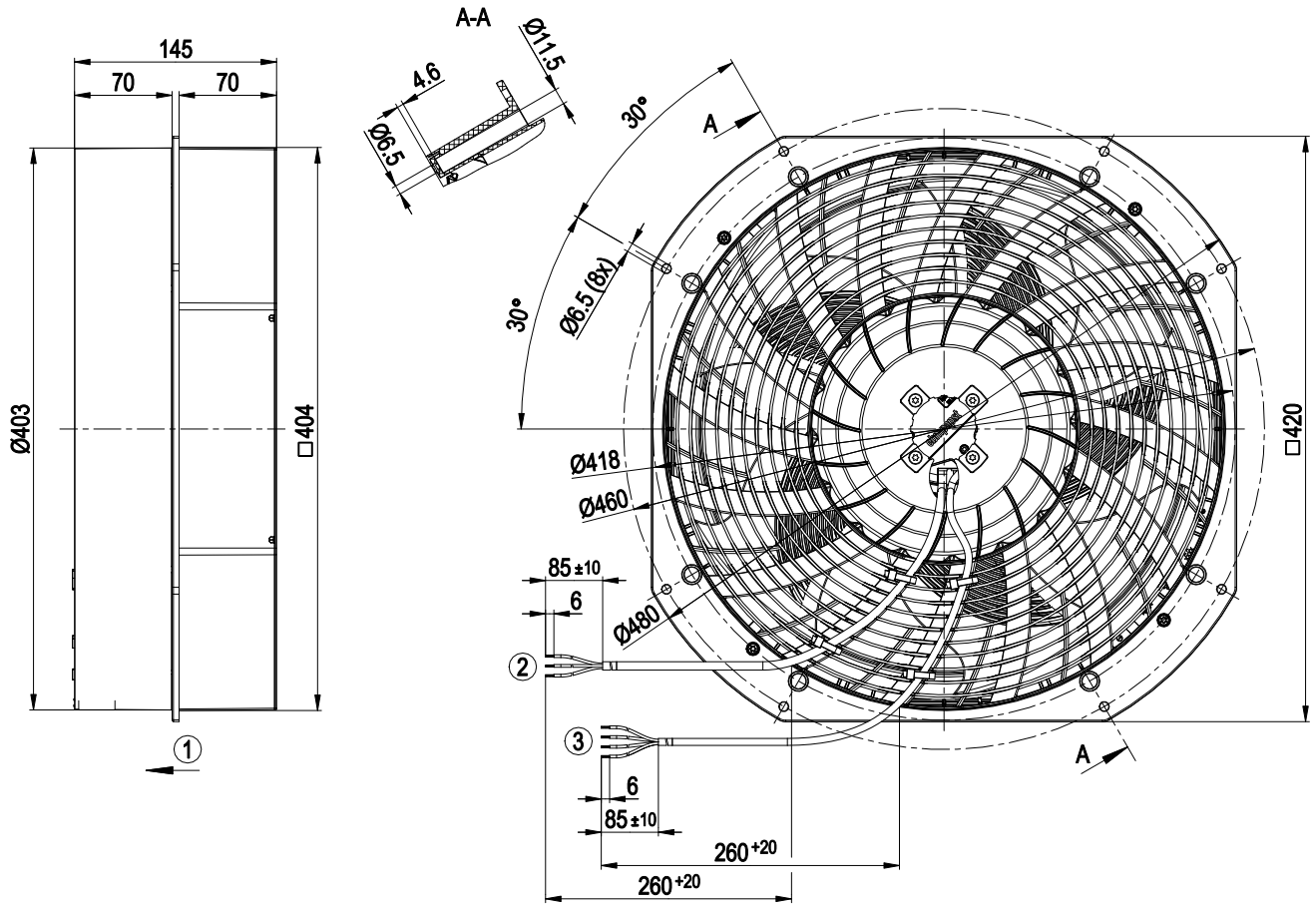

	3x splice
3	Control wire (CTRL) PVC AWG22
	4x splice
-	Accessory part: Guard grill 35050-2-4039 with oval head screw 60080-7-6201 (4x), can be fitted on the intake side. Not included in scope of delivery.
	The installation of accessories may change the air performance and noise values.
1	Airflow direction "V"
2	Supply line (PWR) PVC AWG20

ebm-papst Mulfingen GmbH & Co. KG · Bachmühle 2 · D-74673 Mulfingen · Phone +49 (0) 7938 81-0 · Fax +49 (0) 7938 81-110 · info1@de.fansco.com · www.fansco.com

EC axial panel fan - AxiEco

Fan housing with guard grille

Accessory part

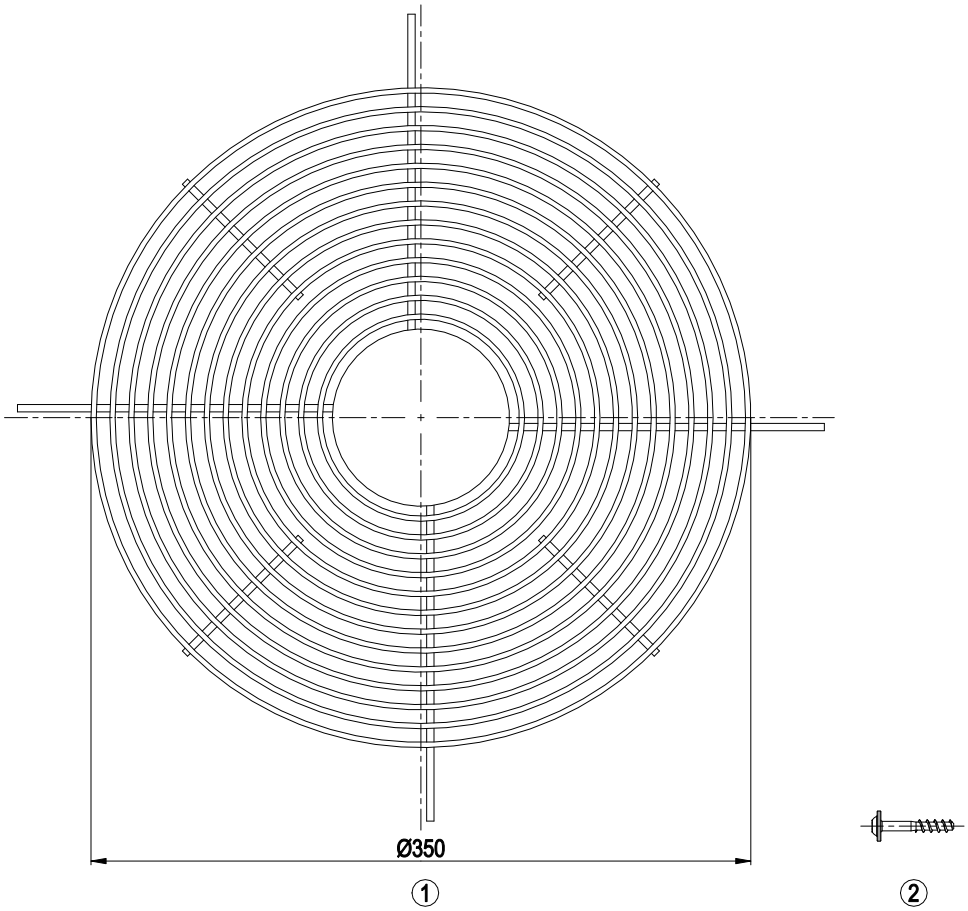

1	Guard grill 35050-2-4039
2	Oval head screw 60080-7-6201 (4x)

ebm-papst Mulfingen GmbH & Co. KG · Bachmühle 2 · D-74673 Mulfingen · Phone +49 (0) 7938 81-0 · Fax +49 (0) 7938 81-110 · info1@de.fansco.com · www.fansco.com

EC axial panel fan - AxiEco

Fan housing with guard grille

Mounting dimensions

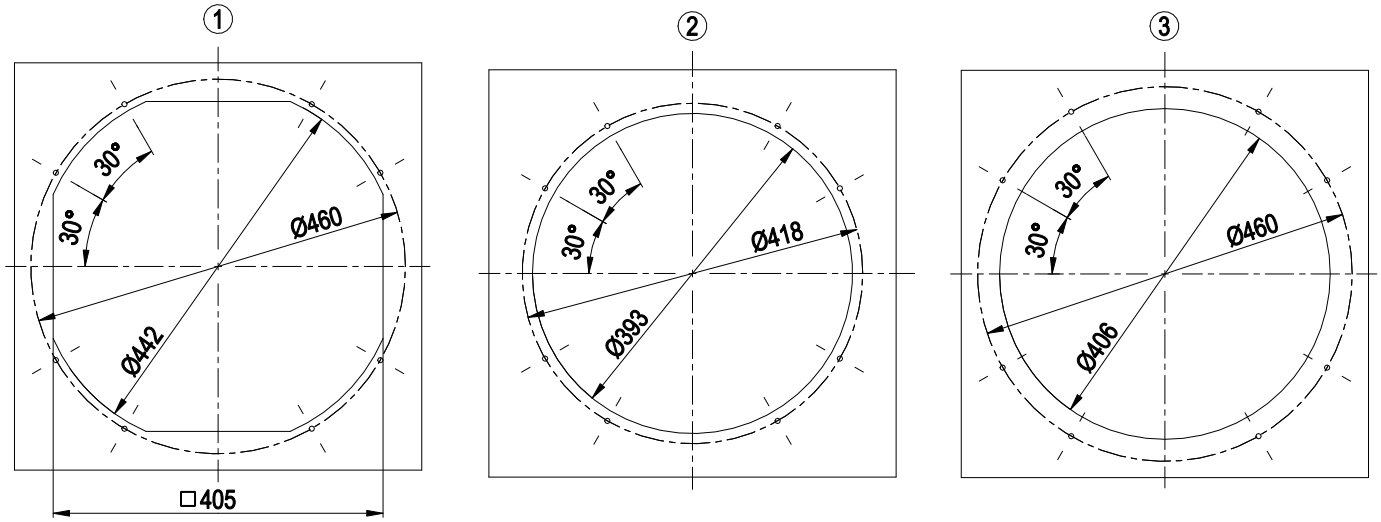

	All 8 holes on the relevant pitch circle must always be used for all types of fastening.
1	intake-side mounting on flange
2	intake-side mounting on suction nozzle
	The Ø6.5 mm holes must be pierced from the underside with a mandrel or similar tool.
	We recommend using M6 cheese-head screws with hexagon socket (DIN 912/DIN EN ISO 4762) for fastening.
3	outlet-side mounting on flange

ebm-papst Mulfingen GmbH & Co. KG · Bachmühle 2 · D-74673 Mulfingen · Phone +49 (0) 7938 81-0 · Fax +49 (0) 7938 81-110 · info1@de.fansco.com · www.fansco.com

EC axial panel fan - AxiEco

Fan housing with guard grille

Connection diagram

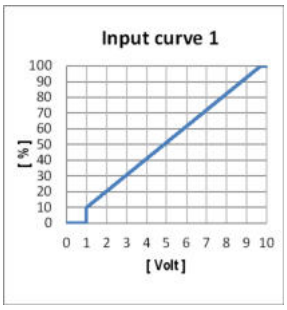

No.	Conn.	Designation	Color	Function/assignment
	PWR	L	black	Power supply, phase, see nameplate for voltage range
	PWR	N	blue	Power supply, neutral conductor, see nameplate for voltage range
	PWR	PE	green/yellow	Protective earth
	CTRL	GND	blue	Reference ground for control interface, SELV
	CTRL	IO1	yellow	Factory setting: Analog input 0-10 V/PWM, Ri=100 KΩ, fPWM=1 kHz..10 kHz, Function: Speed set value Characteristic curve parameterizable (see "Input curve 1"), SELV Function parameterizable at the factory (see Optional interface functions table)
	CTRL	IO2	white	Factory setting: Open collector output, Umax=50 VDC, Imax= 10 mA, function: Tach output 1 pulse/revolution, SELV Function parameterizable at factory (see table Optional interface functions)
	CTRL	Vout	red	Voltage output 10 VDC +/-3%, Imax=1.1 mA Not short-circuit-proof, power supply for external devices, SELV

ebm-papst Mulfingen GmbH & Co. KG · Bachmühle 2 · D-74673 Mulfingen · Phone +49 (0) 7938 81-0 · Fax +49 (0) 7938 81-110 · info1@de.fansco.com · www.fansco.com

Terminal/plug assignment

Basic (B4)

Factory configuration option upon request

○ *Factory configuration option*

	configurable IO mode	electrical specification	INPUT				OUTPUT				
			source: set value	switch: parameter set: #1 / #2	switch: direction of rotation: cw / ccw	switch: enable/disable input	configurable function	signal: tach out	signal: diagnostics out	signal: alarm out	signal: run monitoring	signal: status	signal: configurable function
IO1	○ **Din1 (high active)**: digital input	active: parameterizable voltage x-30 VDC not active: pin open or parameterizable voltage <x VDC, SELV		○	○	○	○						
	○ **Ain1 0-10 V/PWM:** analog input	Ri = 100 kΩ, characteristic curve parameterizable, f_{PWM} = 1k..10 kHz, SELV	○										
IO2	○ **Tach out** (open collector)	Umax=50 VDC, Imax=10 mA, SELV						○					
	○ **Diagnostics out** (open collector)	Umax=50 VDC, Imax=10 mA, SELV							○				
	○ **Alarm out** (open collector)	Umax=50 VDC, Imax=10 mA, SELV								○			
	○ **Open collector**	Umax=50 VDC, Imax=10 mA, SELV										○	○
Vout	Voltage output	Voltage10 VDC, SELV											

ebm-papst Mulfingen GmbH & Co. KG · Bachmühle 2 · D-74673 Mulfingen · Phone +49 (0) 7938 81-0 · Fax +49 (0) 7938 81-110 · info1@de.fansco.com · www.fansco.com

8300100080

VWT0350CSLFS

EC axial panel fan - AxiEco

Fan housing with guard grille

Curves: Air performance 50 Hz

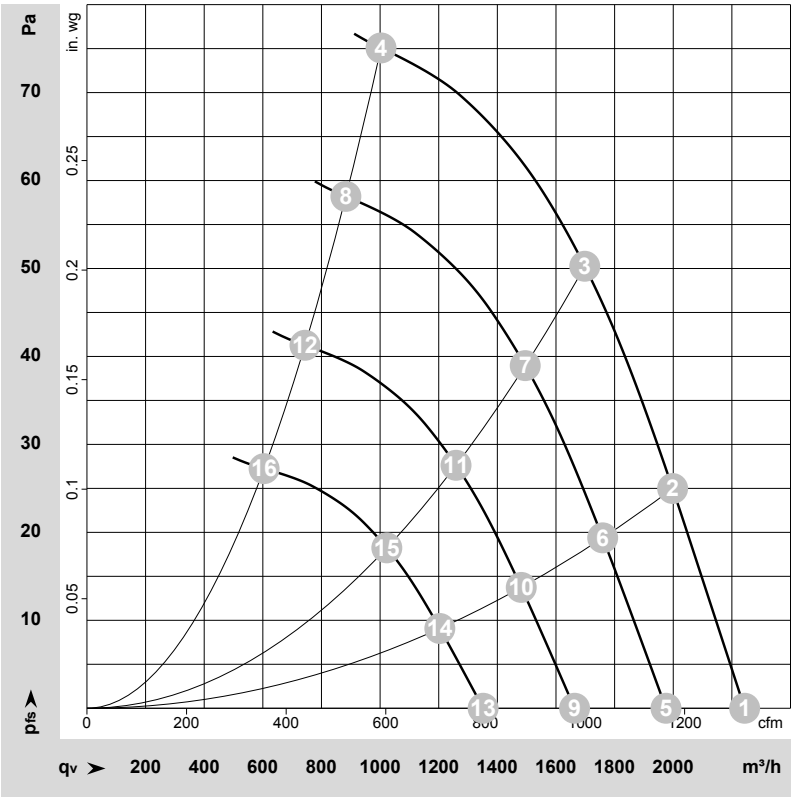

ρ = 1.15 kg/m³ ± 2 %

Measurement: LU-220240-1
Date: 2022-03-31
Housing: 35001-2-2910
Nozzle: 35000-2-2943

Air performance measured according to ISO 5801 installation category A. For detailed information on the measurement setup, contact ebm-papst. Intake sound level: Sound power level according to ISO 13347 / sound pressure level measured at 1 m distance from fan axis. The values given are valid under the specified measuring conditions and may vary due to conditions of installation. For deviations from the standard configuration, the parameters have to be checked on the installed unit.

Measured values

	Wired	U	f	n	P_e	I	LpA_{in}	LwA_{in}	q_V	p_{fs}	q_V	p_{fs}
		V	Hz	min^{-1}	W	A	dB(A)	dB(A)	m^3/h	Pa	cfm	in. wg
1	1~	230	50	1075	51	0.44	57	63	2245	0	1320	0.00
2	1~	230	50	1075	57	0.49	55	61	2000	25	1175	0.10
3	1~	230	50	1075	63	0.54	53	59	1700	50	1000	0.20
4	1~	230	50	1075	68	0.59	54	61	1005	75	590	0.30
5	1~	230	50	950	34	0.30	54	60	1975	0	1160	0.00
6	1~	230	50	950	39	0.34	52	58	1760	19	1035	0.08
7	1~	230	50	950	43	0.37	50	56	1495	39	880	0.16
8	1~	230	50	950	44	0.37	51	58	885	58	520	0.23
9	1~	230	50	800	21	0.18	50	56	1665	0	980	0.00
10	1~	230	50	800	23	0.20	48	54	1480	14	870	0.06
11	1~	230	50	800	26	0.22	45	52	1260	28	740	0.11
12	1~	230	50	800	26	0.22	47	54	745	41	440	0.16
13	1~	230	50	650	11	0.10	44	51	1350	0	795	0.00
14	1~	230	50	650	13	0.11	43	49	1205	9	710	0.04
15	1~	230	50	650	14	0.12	40	47	1025	18	600	0.07
16	1~	230	50	650	14	0.12	42	49	605	27	355	0.11

Wired = Wiring · U = Voltage · f = Frequency · n = Speed (rpm) · P_e = Power consumption · I = Current draw · LpA_{in} = Sound pressure level intake side · LwA_{in} = Sound power level intake side
q_V = Air flow · p_{fs} = Pressure increase

ebm-papst Mulfingen GmbH & Co. KG · Bachmühle 2 · D-74673 Mulfingen · Phone +49 (0) 7938 81-0 · Fax +49 (0) 7938 81-110 · info1@de.fansco.com · www.fansco.com