FP-108-7

127x127x38mm JUPITER

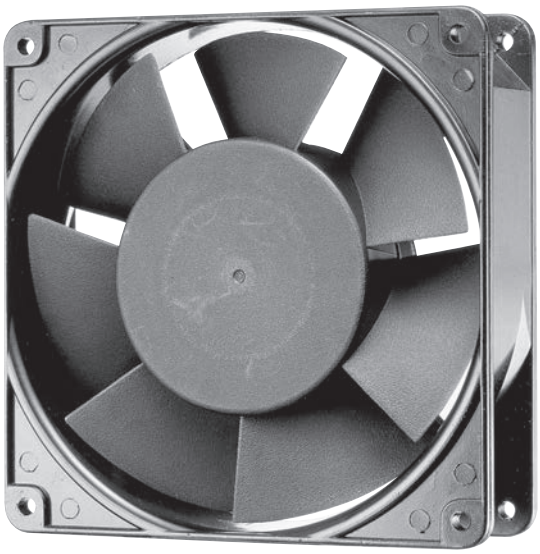

DESIGN FEATURES

*BEARING SYSTEM: SLEEVE BEARING & BALL BEARING
*IMPELLER: PLASTIC WITH FIBER GLASS FILLED UL 94V-0
*HOUSING: DIE CAST ALUMINUM PAINTED BLACK OR NATURAL COLOR
*MOTOR: SHADED POLE, IMPEDANCE PROTECTED
*CONNECTING: TERMINAL & WIRE LEADS
*SPEED: S-1 HIGH SPEED TYPE
S-2 MEDIUM SPEED TYPE
S-3 LOW SPEED TYPE
*OTHER VOLTAGE: 24 ,48, 100, 380AC (50/60Hz) ARE AVAILABLE

DIMENSIONS:MM

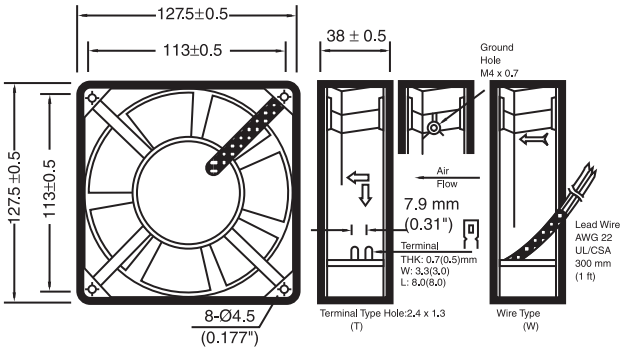

PERFORMANCE

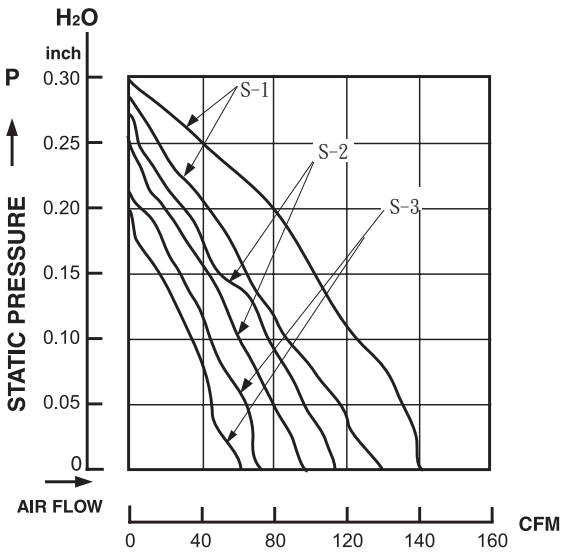

SPECIFICATIONS

Specifications are subject to change without notice

MODEL NO.	VOLT (VAC)	FREQUENCY (HZ)	AIR (CFM)	VOLUME (M^3/MIN)	CURRENT (A)	POWER (W)	SPEED (RPM)	STATIC PRESSURE (INCH-H_2O)	NOISE (dBA)
FP-108-7 (S-1)	110/120	50/60	115/140	3.30/4.00	0.26/0.24	24/23	2700/3000	0.28/0.30	44/47
FP-108-7 (S-1)	220/240	50/60	115/140	3.30/4.00	0.16/0.14	24/23	2700/3000	0.28/0.30	44/47
FP-108-7 (S-2)	110/120	50/60	85/105	2.40/3.00	0.16/0.14	20/19	2200/2500	0.26/0.27	39/40
FP-108-7 (S-2)	220/240	50/60	85/105	2.40/3.00	0.14/0.12	20/19	2200/2500	0.26/0.27	39/40
FP-108-7 (S-3)	110/120	50/60	72/80	2.00/2.30	0.14/0.12	14/12	1800/2100	0.20/0.21	32/36
FP-108-7 (S-3)	220/240	50/60	72/78	2.00/2.30	0.12/0.10	11/10	1800/2100	0.20/0.21	32/36