W3G300-TK13-30

EC axial fan

sickled blades (S series), single inlet

Wall ring with guard grille

W3G300-TK13-30 ebmpapst Datasheet

sales@fansco.com

www.fansco.com

Nominal data

Type	**W3G300-TK13-30**
Motor	**M3G055-CF**

Phase		1~
Nominal voltage	VAC	230
Nominal voltage range	VAC	200 .. 240
Frequency	Hz	50/60

Type of data definition		ml
Speed	min^{-1}	1500
Power input	W	85
Current draw	A	0.8
Max. back pressure	Pa	80
Min. ambient temperature	°C	-40
Max. ambient temperature	°C	40

ml = Max. load · me = Max. efficiency · fa = Running at free air · cs = Customer specs · cu = Customer unit
Subject to alterations

EC axial fan

sickled blades (S series), single inlet

Wall ring with guard grille

Technical features

Mass	2.7 kg
Size	300 mm
Surface of rotor	Thick layer passivated
Material of blades	Press-fitted sheet steel blank, sprayed with PP plastic
Material of wall ring	PP plastic
Material of guard grille	Steel, coated in black plastic (RAL9005)
Number of blades	5
Direction of air flow	"V"
Direction of rotation	Counter-clockwise, seen on rotor
Type of protection	IP 54
Insulation class	"B"
Max. permissible ambient motor temp. (transp./ storage)	+ 70 °C
Min. permissible ambient motor temp. (transp./storage)	- 40 °C
Mounting position	Any
Condensate discharge holes	None, open rotor
Operation mode	S1
Motor bearing	Ball bearing with anti-freezing grease
Technical features	- Motor current limit - Soft start - Over-temperature protected electronics / motor
Speed steps	2
EMC interference immunity	Acc. to EN 61000-6-2 (industrial environment)
EMC harmonics	Acc. to EN 61000-3-2/3
EMC interference emission	Acc. to EN 61000-6-3 (household environment)
Touch current acc. IEC 60990 (measuring network Fig. 4, TN system)	<= 3.5 mA
Motor protection	Locked-rotor protection
Cable exit	Variable
Protection class	I (if protective earth is connected by customer)
Product conforming to standard	EN 60335-1; CE
Approval	CCC

W3G300-TK13-30 ebmpapst Datasheet sales@fansco.com www.fansco.com

EC axial fan

sickled blades (S series), single inlet

Wall ring with guard grille

Product drawing

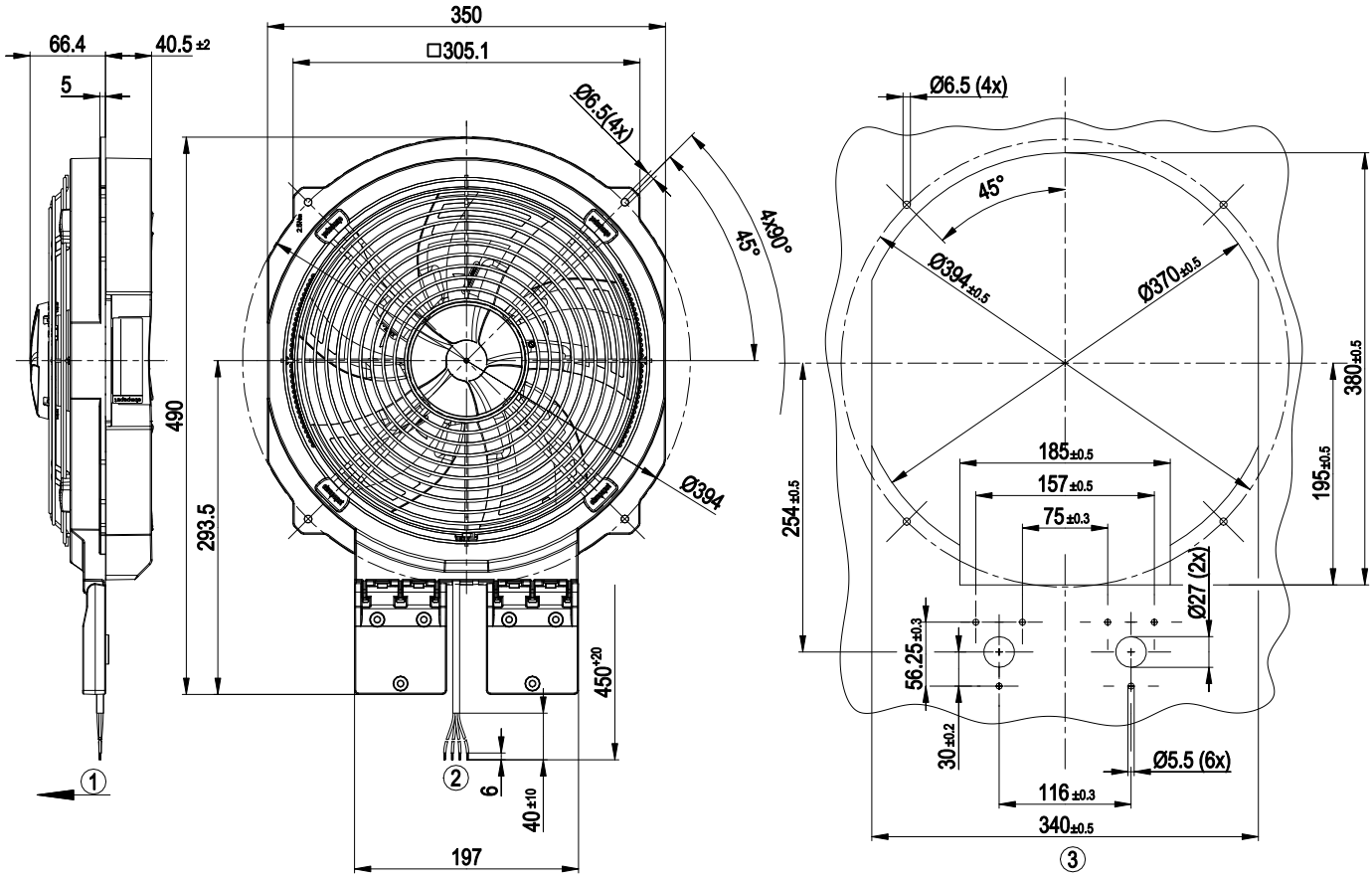

1	Direction of air flow "V"
2	Connection line PVC 4G 0.5 mm², 4x lead tips crimped
3	Mounting dimensions

W3G300-TK13-30 ebmpapst Datasheet sales@fansco.com www.fansco.com

EC axial fan

sickled blades (S series), single inlet

Wall ring with guard grille

Connection screen

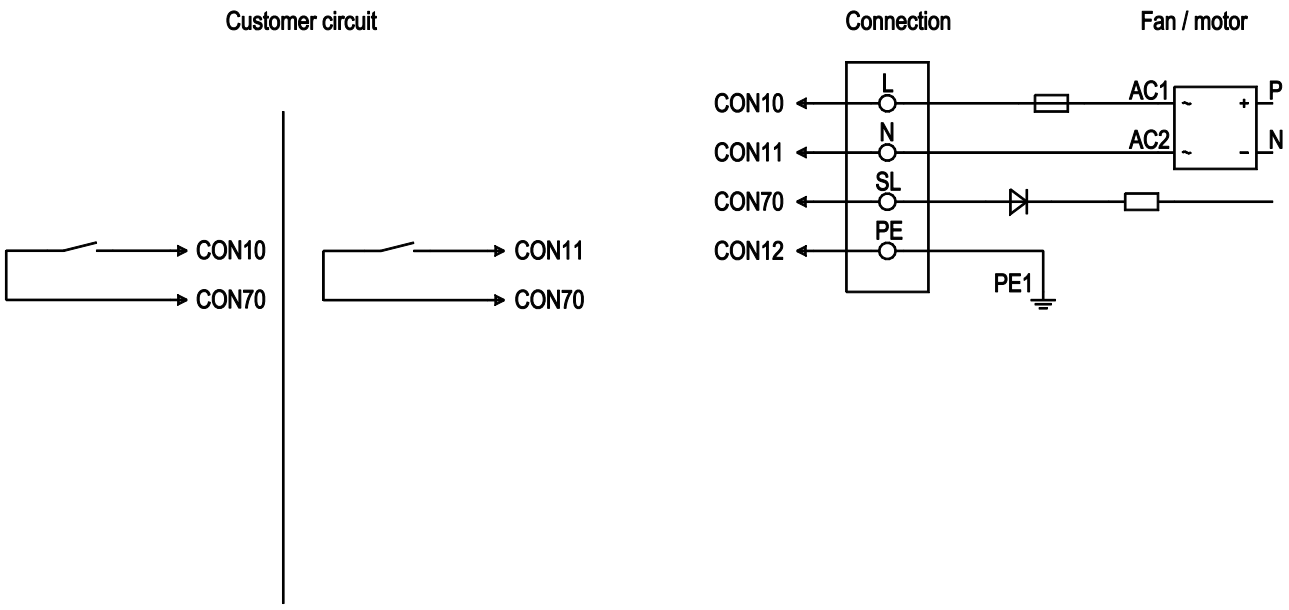

No.	Conn.	Designation	Colour	Function / assignment
	CON 10	L	black	Power supply 230 VAC, 50 - 60 Hz, see type plate for voltage range
	CON 11	N	blue	Neutral conductor
	CON 12	PE	green/yellow	Protective earth
	CON 70	SL	brown	Speed selection: switch open = speed 1; switch closed = speed 2

W3G300-TK13-30 ebmpapst Datasheet sales@fansco.com www.fansco.com

EC axial fan

sickled blades (S series), single inlet

Wall ring with guard grille

Charts: Air flow 50 Hz

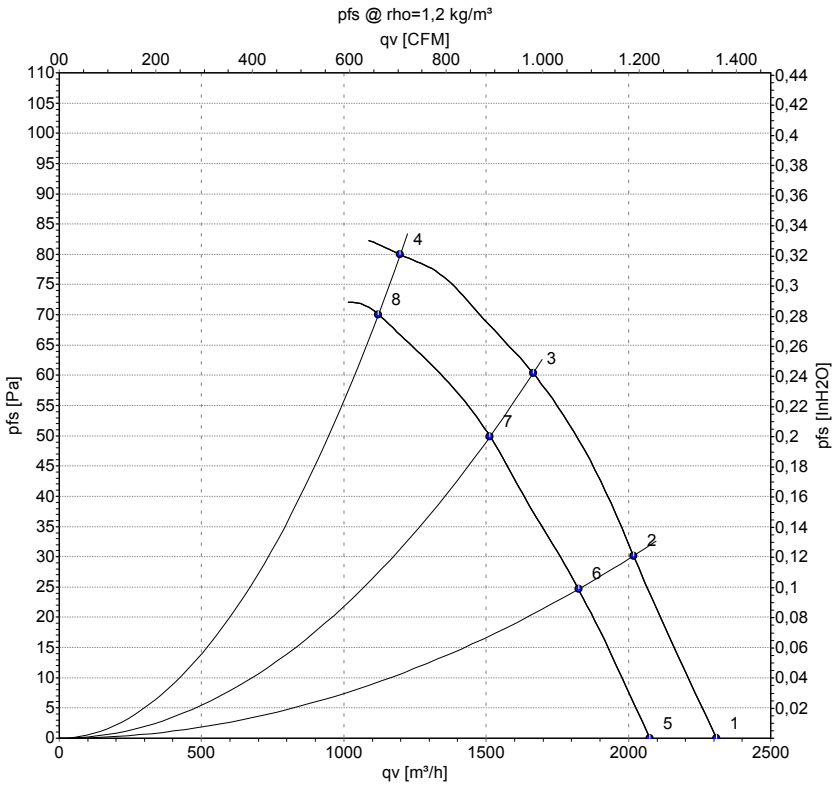

Measurement: LU-152176
Measurement: LU-152177

Air performance measured as per ISO 5801 Installation category A. For detailed information on the measuring set-up, please contact ebm-papst. Suction-side noise levels: LwA measured as per ISO 13347 / LpA measured with 1m distance to fan axis. The values given are valid under the measuring conditions mentioned above and may vary according to the actual installation situation. With any deviation from the standard set-up, the specific values have to be checked and reviewed with the unit installed.

Measured values

	U	f	n	P_{ed}	I	LpA_{in}	LwA_{in}	qv	p_{fs}
	V	Hz	min^{-1}	W	A	dB(A)	dB(A)	m^3/h	Pa
1	230	50	1685	74	0.70	60	68	2310	0
2	230	50	1635	80	0.75	59	66	2020	30
3	230	50	1580	83	0.79	56	64	1665	60
4	230	50	1500	85	0.80	54	62	1200	80
5	230	50	1515	54	0.53	58	65	2075	0
6	230	50	1470	59	0.57	57	64	1825	25
7	230	50	1435	63	0.61	55	63	1515	50
8	230	50	1390	68	0.65	53	60	1120	70

U = Supply voltage · f = Frequency · n = Speed · P_{ed} = Power input · I = Current draw · LpA_{in} = Sound pressure level inlet side · LwA_{in} = Sound power level inlet side · qv = Air flow
p_{fs} = Pressure increase

W3G300-TK13-30 ebmpapst Datasheet sales@fansco.com www.fansco.com