W3G300-QY25-23

EC axial fan

with brushless DC motor

Automotive

W3G300-QY25-23 ebmpapst Datasheet
sales@fansco.com
www.fansco.com

Nominal data

Type	**W3G300-QY25-23**
Motor	**M3G084-BF**

Nominal voltage	VDC	26
Nominal voltage range	VDC	16 .. 32

Method of obtaining data		fa
Speed (rpm)	min^{-1}	3925
Power consumption	W	400
Current draw	A	15.4
Min. ambient temperature	°C	-40
Max. ambient temperature	°C	85

ml = Max. load · me = Max. efficiency · fa = Free air · cs = Customer specification · ce = Customer equipment
Subject to change

EC axial fan

with brushless DC motor

Automotive

Technical description

Weight	2.16 kg
Size	300 mm
Motor size	84
Blade material	PA plastic
Fan housing material	PA plastic
Number of blades	7
Airflow direction	V
Direction of rotation	Clockwise, viewed toward rotor
Degree of protection	Motor IP24 KM, electronics IP6K9K (mating connector installed)
Insulation class	"B"
Moisture (F) / Environmental (H) protection class	H4
Ambient temperature note	Over +85 °C with power derating
Max. permitted ambient temp. for motor (transport/storage)	+85 °C
Min. permitted ambient temp. for motor (transport/storage)	-40 °C
Installation position	Any
Condensation drainage holes	None, open rotor
Mode	S1
Motor bearing	Ball bearing; (sealed)
Technical features	- Error output (high-side switch) - Power limiter - Load dump (58 V) - Motor current limitation - Reverse operation (reversal of rotation) - Soft start - Control input 0-10 VDC / PWM - Temperature derating - Overvoltage detection - Thermal overload protection for electronics - Line undervoltage detection
EMC regulations	According to ECE R10 Rev.6
Electrical hookup	Connector with cable
Motor protection	Reverse polarity and locked-rotor protection
With cable	Lateral
Protection class assignment	III; Requires supply with safety extra-low voltage SELV. This component for installation may have several local protection classes. This information relates to this component's basic design. The final protection class is based on the component's intended installation and connection.
Comment on CE	Ecodesign Directive 2009/125/EC + Fan Regulation (EC) No. 327/2011 does not apply, as use only in means of transport for transporting persons or goods.
Approval	E1; EAC
Comment	Type approval number – 069119

W3G300-QY25-23 ebmpapst Datasheet FansCo sales@fansco.com www.fansco.com

EC axial fan

with brushless DC motor

Automotive

Product drawing

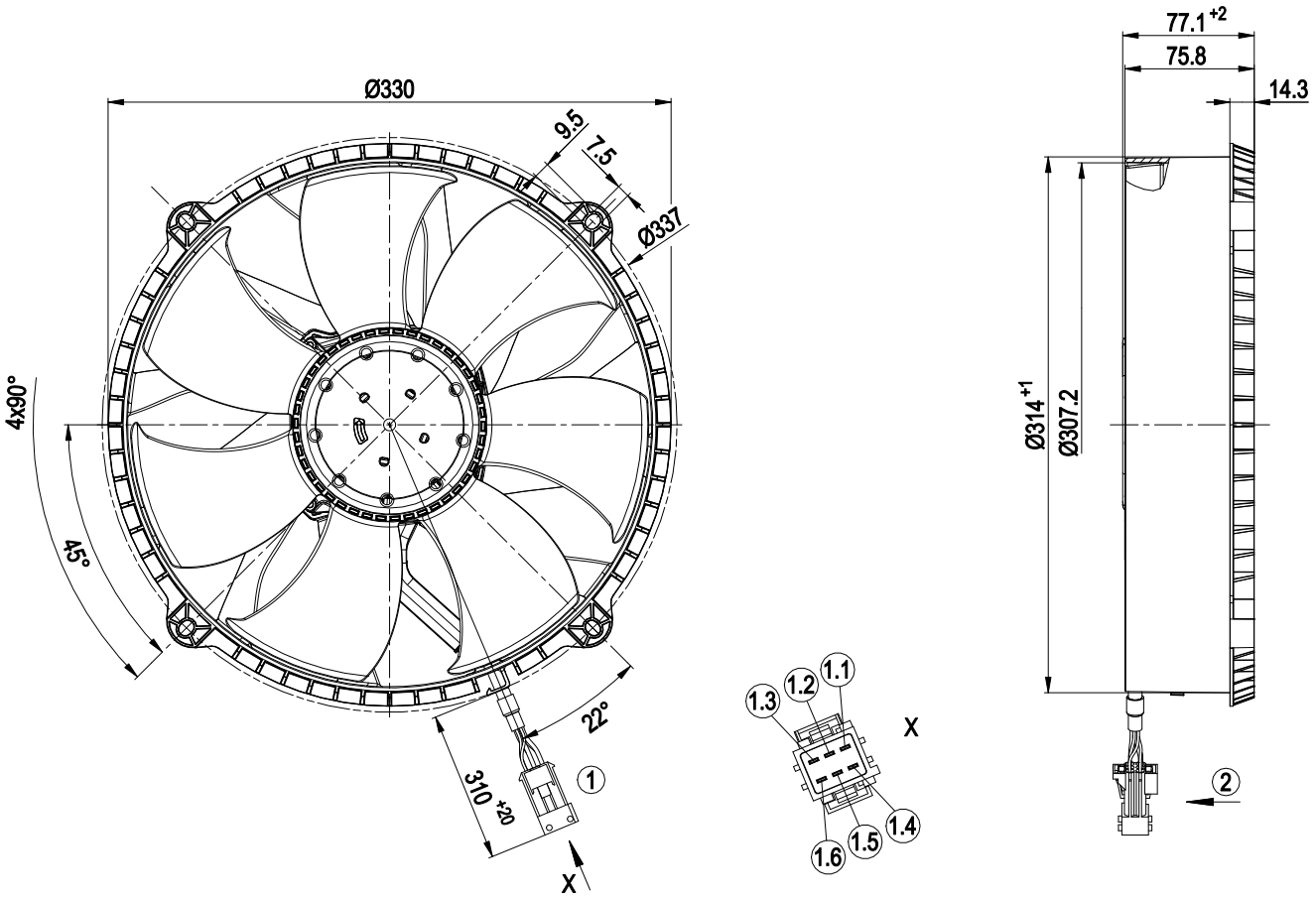

1	Cable FLRYW 2x 3 mm², 3x 0.75 mm²
	6-pole connector housing TE 1-962349-1, 2x flat plug TE 2-962916-1, 3x flat plug TE 1-962915-1 1x seal TE 963205-1, 2x seal TE 828905-1, 3x seal TE 828904-1, 1x dummy plug TE 828922-1
1.1	+ UB
1.2	GND
1.3	PWM/LIN
1.4	Not used / no function
1.5	Reverse
1.6	Diagnostic output
	6-pole mating connector TE 1-963212-1, 3x receptacle TE 929939-1, 2x receptacle TE 929937-1, 1x dummy plug TE 828922-1
2	Airflow direction "V"

W3G300-QY25-23 ebmpapst Datasheet FansCo sales@fansco.com www.fansco.com

EC axial fan

with brushless DC motor

Automotive

Connection diagram

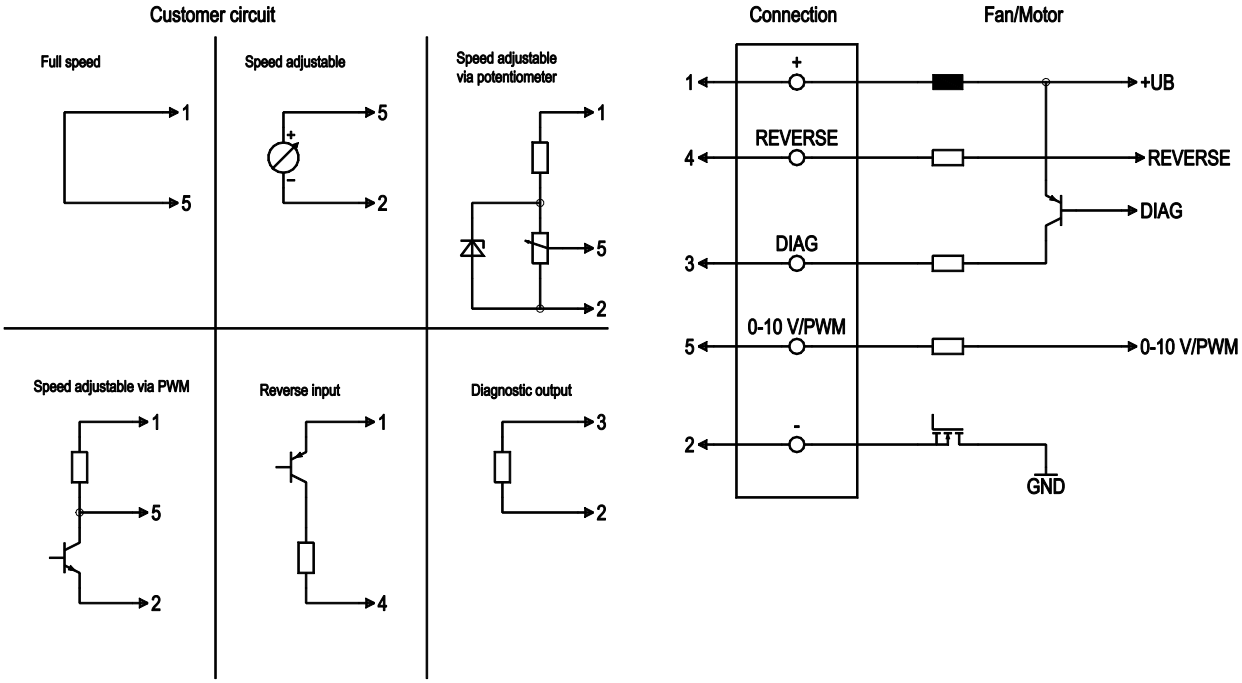

No.	Conn.	Designation	Color	Function/assignment
1.1	1	+	black	Power supply, see nameplate for voltage range
1.2	2	-	brown	Power supply, see nameplate for voltage range
1.6	3	DIAG	white	Diagnostic output: Ri = 0.05 kΩ output level in nominal operation -> Low
1.5	4	Reverse	blue	Reversal of rotation input: Ri = 47 kΩ connected to power supply + -> direction of rotation is reversed, or open -> reversal of rotation inactive
1.3	5	0-10 V / PWM	yellow	Control input: Ri > 42 kΩ 0-10 V (typ. <1 V -> n = 0; 1.5 V -> n = min.; 10 V -> n = max.), potentiometer (limit voltage at potentiometer with 12 V Z-diode) or PWM (>12 V; 0.1-50 kHz; typ. <2% -> n = 0; 5% -> n = min. ; 100% -> n = max.)

W3G300-QY25-23 ebmpapst Datasheet FansCo sales@fansco.com www.fansco.com

EC axial fan

with brushless DC motor

Automotive

Curves: Air performance

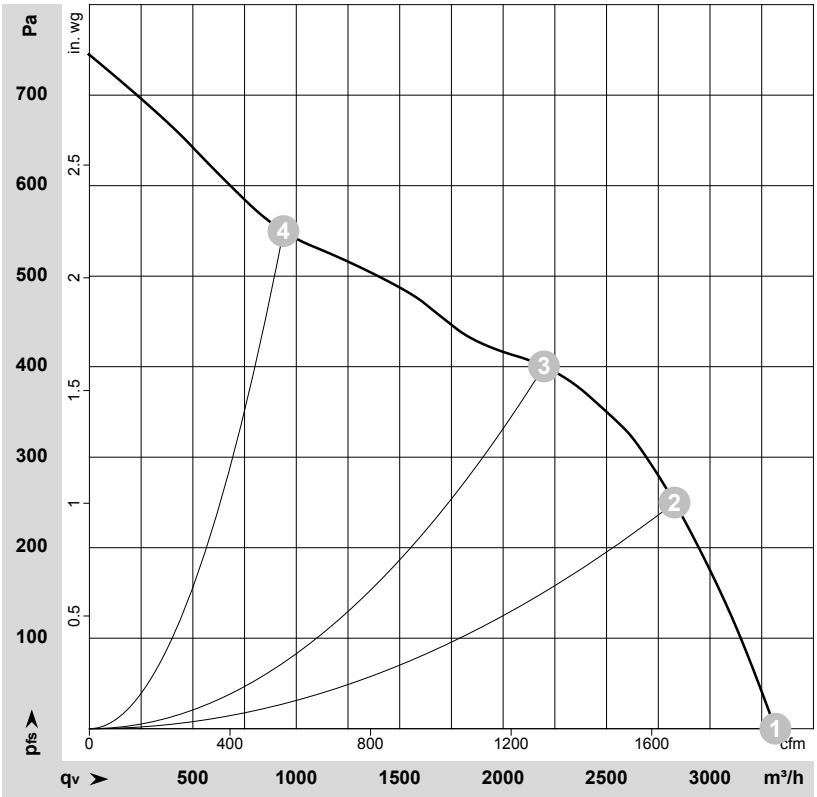

ρ = 1.15 kg/m³ ± 2 %

Measurement: LU-195094-1

Air performance measured according to ISO 5801 installation category A. For detailed information on the measurement setup, contact ebm-papst. Intake sound level: Sound power level according to ISO 13347 / sound pressure level measured at 1 m distance from fan axis. The values given are valid under the specified measuring conditions and may vary due to conditions of installation. For deviations from the standard configuration, the parameters have to be checked on the installed unit.

Measured values

	U	n	P_{ed}	I	LpA_{in}	LwA_{in}	q_V	p_{fs}	q_V	p_{fs}
	V	min^{-1}	W	A	dB(A)	dB(A)	m^3/h	Pa	cfm	in. wg
1	26	3925	400	15.40	81	89	3315	0	1950	0.00
2	26	3935	516	19.80	80	88	2830	250	1665	1.00
3	26	3830	530	20.40	80	88	2195	400	1295	1.61
4	26	3620	499	19.18	85	92	940	550	550	2.21

U = Voltage · n = Speed (rpm) · P_{ed} = Power consumption · I = Current draw · LpA_{in} = Sound pressure level intake side · LwA_{in} = Sound power level intake side · q_V = Air flow
p_{fs} = Pressure increase

W3G300-QY25-23 ebmpapst Datasheet FansCo sales@fansco.com www.fansco.com