W2E250-HL06-21

AC axial compact fan

straight blades (A series)

W2E250-HL06-21 ebmpapst Datasheet FansCo
sales@fansco.com
www.fansco.com

Nominal data

Type	**W2E250-HL06-21**
Motor	**M2E068-CF**

Phase		1~	1~
Nominal voltage	VAC	230	230
Frequency	Hz	50	60
Type of data definition		fa	fa
Valid for approval / standard		CE	CE
Speed	min^{-1}	2450	2600
Power input	W	115	150
Current draw	A	0.51	0.66
Motor capacitor	µF	3	3
Capacitor voltage	VDB	400	400
Capacitor standard		P0 (CE)	P0 (CE)
Max. back pressure	Pa	90	75
Min. ambient temperature	°C	-25	-25
Max. ambient temperature	°C	75	60
Starting current	A	0.88	0.87

ml = Max. load · me = Max. efficiency · fa = Running at free air · cs = Customer specs · cu = Customer unit
Subject to alterations

W2E250-HL06-21

AC axial compact fan

straight blades (A series)

Technical features

Mass	3 kg
Size	250 mm
Surface of rotor	Coated in black
Material of blades	Sheet steel, coated in black
Housing material	Die-cast aluminium
Number of blades	7
Direction of air flow	"V"
Direction of rotation	Counter-clockwise, seen on rotor
Type of protection	IP 44; Depending on installation and position
Insulation class	"F"
Humidity class	F0
Max. permissible ambient motor temp. (transp./ storage)	+ 80 °C
Min. permissible ambient motor temp. (transp./storage)	- 40 °C
Mounting position	Any
Condensate discharge holes	None
Operation mode	S1
Motor bearing	Ball bearing
Touch current acc. IEC 60990 (measuring network Fig. 4, TN system)	< 0.75 mA
Electrical leads	Via terminals, capacitor connected via terminals
Motor protection	Thermal overload protector (TOP) brought out
Cable exit	Variable
Protection class	I (if protective earth is connected by customer)
Product conforming to standard	EN 60335-1; CE
Approval	CSA C22.2 Nr.100; UL 1004-1

W2E250-HL06-21

AC axial compact fan

straight blades (A series)

Product drawing

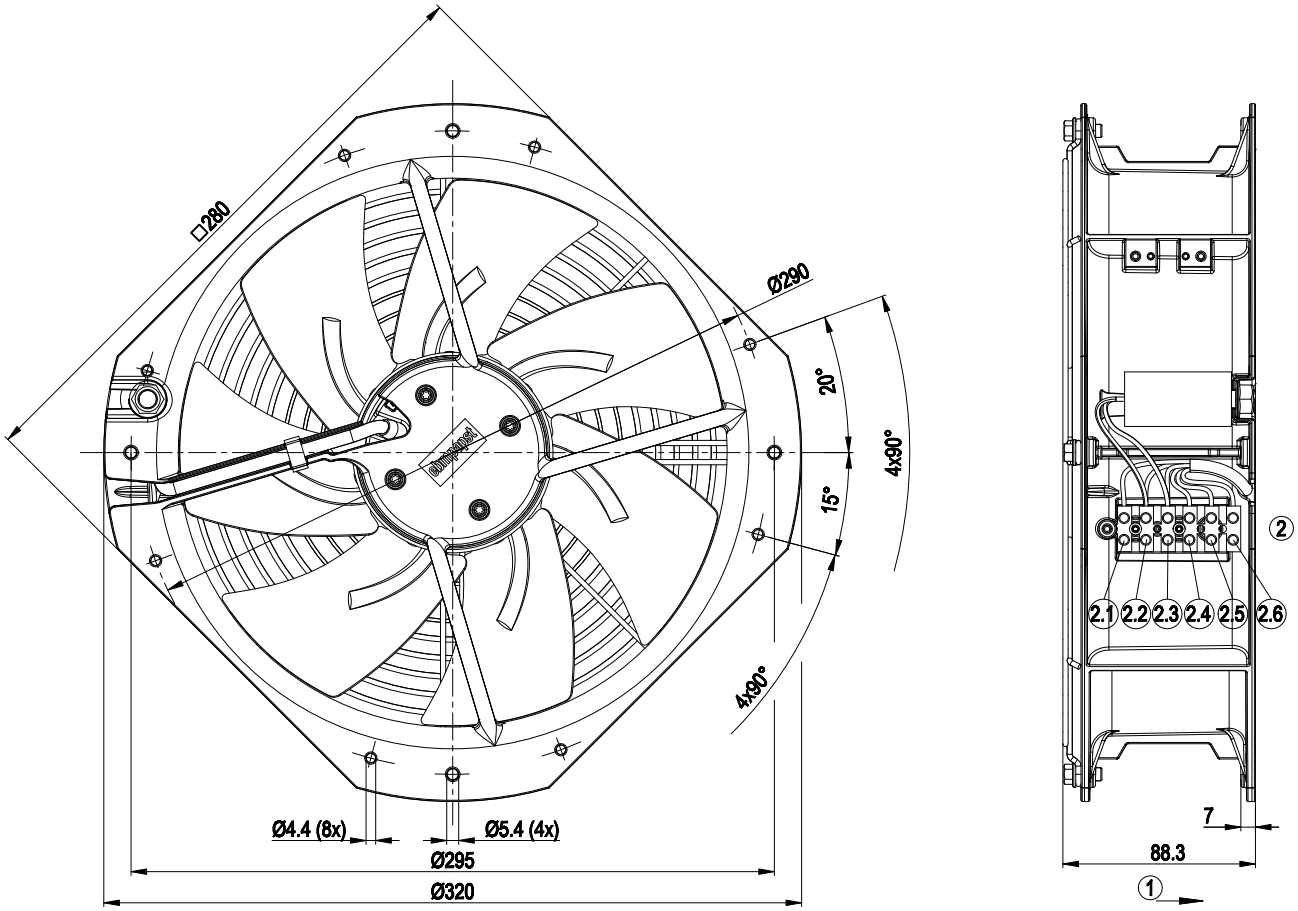

1	Direction of air flow "V"
2	Connection line PFA 6G AWG20, with terminal strip
2.1	green / yellow
2.2	brown + capacitor
2.3	black + capacitor
2.4	blue
2.5	white
2.6	white

W2E250-HL06-21

AC axial compact fan

straight blades (A series)

Connection screen

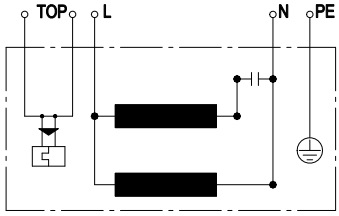

L	blue	N	black	PE	green / yellow
TOP	2 x white				

W2E250-HL06-21

AC axial compact fan

straight blades (A series)

Charts: Air flow 50 Hz

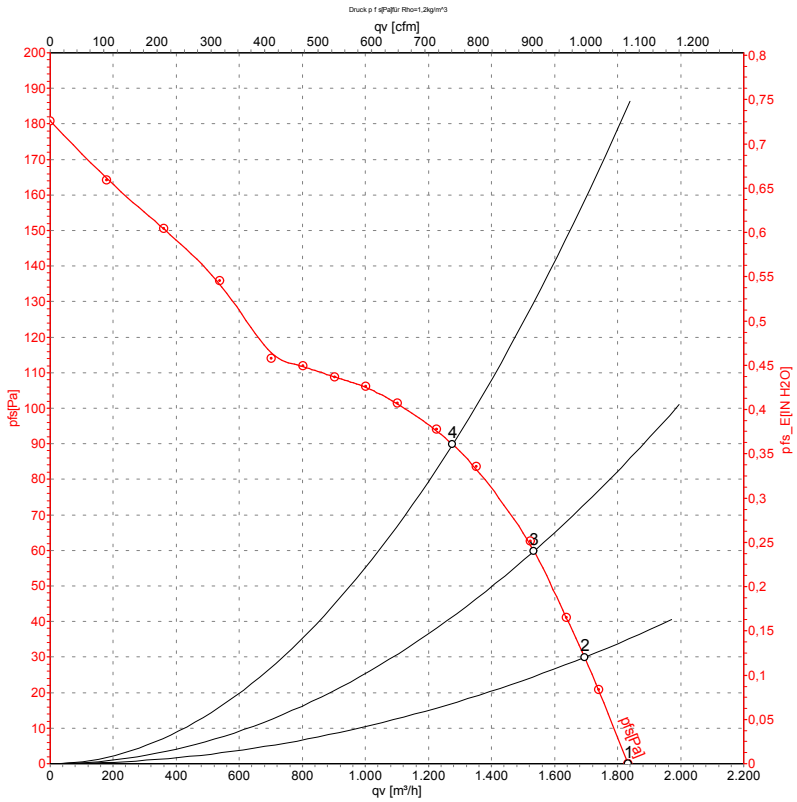

Measurement: LU-60083

Air performance measured as per ISO 5801 Installation category A. For detailed information on the measuring set-up, please contact ebm-papst. Suction-side noise levels: LwA measured as per ISO 13347 / LpA measured with 1m distance to fan axis. The values given are valid under the measuring conditions mentioned above and may vary according to the actual installation situation. With any deviation from the standard set-up, the specific values have to be checked and reviewed with the unit installed.

Measured values

	U	f	n	P_e	I	qv	p_{fs}
	V	Hz	min^{-1}	W	A	m^3/h	Pa
1	230	50	2450	115	0.51	1835	0
2	230	50	2450	118	0.51	1695	30
3	230	50	2390	124	0.54	1535	60
4	230	50	2320	130	0.57	1275	90

U = Supply voltage · f = Frequency · n = Speed · P_e = Power input · I = Current draw · qv = Air flow · p_{fs} = Pressure increase

W2E250-HL06-21

AC axial compact fan

straight blades (A series)

Charts: Air flow 60 Hz

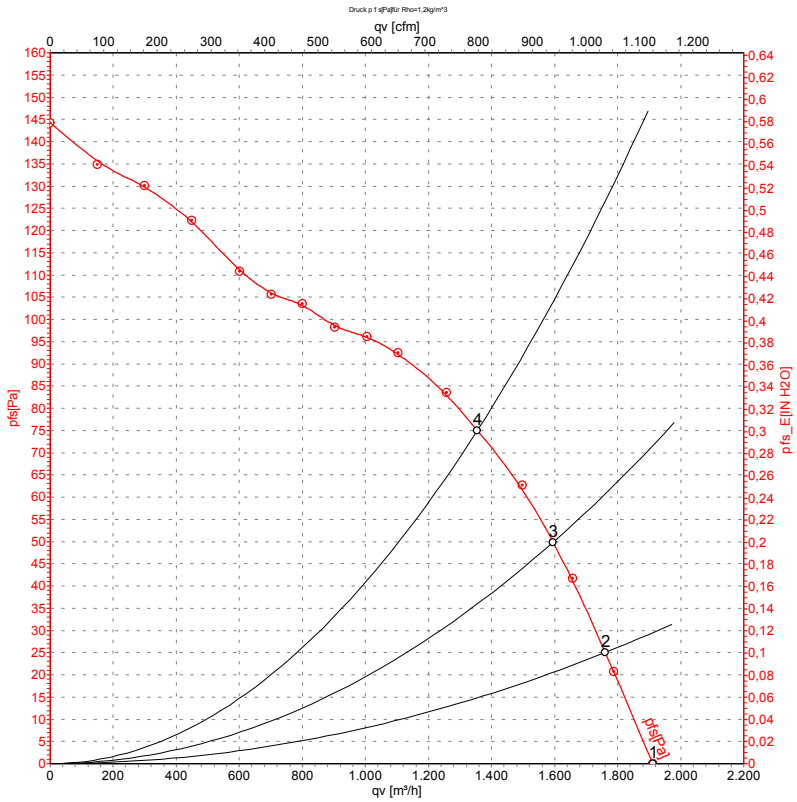

Measurement: LU-60085

Air performance measured as per ISO 5801 Installation category A. For detailed information on the measuring set-up, please contact ebm-papst. Suction-side noise levels: LwA measured as per ISO 13347 / LpA measured with 1m distance to fan axis. The values given are valid under the measuring conditions mentioned above and may vary according to the actual installation situation. With any deviation from the standard set-up, the specific values have to be checked and reviewed with the unit installed.

Measured values

	U	f	n	P_e	I	qv	p_{fs}
	V	Hz	min^{-1}	W	A	m^3/h	Pa
1	230	60	2600	150	0.66	1910	0
2	230	60	2525	155	0.67	1760	25
3	230	60	2420	159	0.69	1595	50
4	230	60	2310	164	0.71	1355	75

U = Supply voltage · f = Frequency · n = Speed · P_e = Power input · I = Current draw · qv = Air flow · p_{fs} = Pressure increase