S6E450-AF08-29/F04

AC axial fan

blades with special design (K series)

with guard grille for short nozzle

S6E450-AF08-29/F04 ebmpapst Datasheet FansCo
sales@fansco.com
www.fansco.com

Nominal data

Type	**S6E450-AF08-29/F04**
Motor	**M6E074-EI**

Phase		1~
Nominal voltage	VAC	230
Frequency	Hz	50
Method of obtaining data		fa
Valid for approval/standard		-
Speed (rpm)	min^{-1}	890
Power consumption	W	140
Current draw	A	0.62
Capacitor	µF	4
Capacitor voltage	VDB	400
Max. back pressure	Pa	45
Max. back pressure	in. wg	0.18
Min. ambient temperature	°C	-25
Max. ambient temperature	°C	40
Starting current	A	0.9

ml = Max. load · me = Max. efficiency · fa = Free air · cs = Customer specification · ce = Customer equipment
Subject to change

S6E450-AF08-29/F04 ebmpapst Datasheet FansCo sales@fansco.com www.fansco.com

AC axial fan

blades with special design (K series)

with guard grille for short nozzle

Technical description

Weight	6 kg
Fan size	450 mm
Rotor surface	Painted black
Blade material	PP plastic
Guard grille material	Steel, coated with black plastic (RAL 9005)
Number of blades	3
Airflow direction	"V"
Direction of rotation	Counterclockwise, viewed toward rotor
Degree of protection	IP44; installation- and position-dependent as per EN 60034-5
Insulation class	"F"
Moisture (F) / Environmental (H) protection class	F5
Max. permitted ambient temp. for motor (transport/storage)	+ 80 °C
Min. permitted ambient temp. for motor (transport/storage)	- 40 °C
Installation position	Shaft horizontal or rotor on bottom; rotor on top on request
Condensation drainage holes	On rotor side
Mode	S1
Motor bearing	Ball bearing
Touch current according to IEC 60990 (measuring circuit Fig. 4, TN system)	< 0.75 mA
Electrical hookup	Via terminal box, capacitor integrated and connected
Motor protection	Thermal overload protector (TOP) internally connected
With cable	Variable
Protection class	I (with customer connection of protective earth)
Motor capacitor according to EN 60252-1 in safety protection class	S0
Approval	CCC

S6E450-AF08-29/F04

AC axial fan

blades with special design (K series)

with guard grille for short nozzle

Product drawing

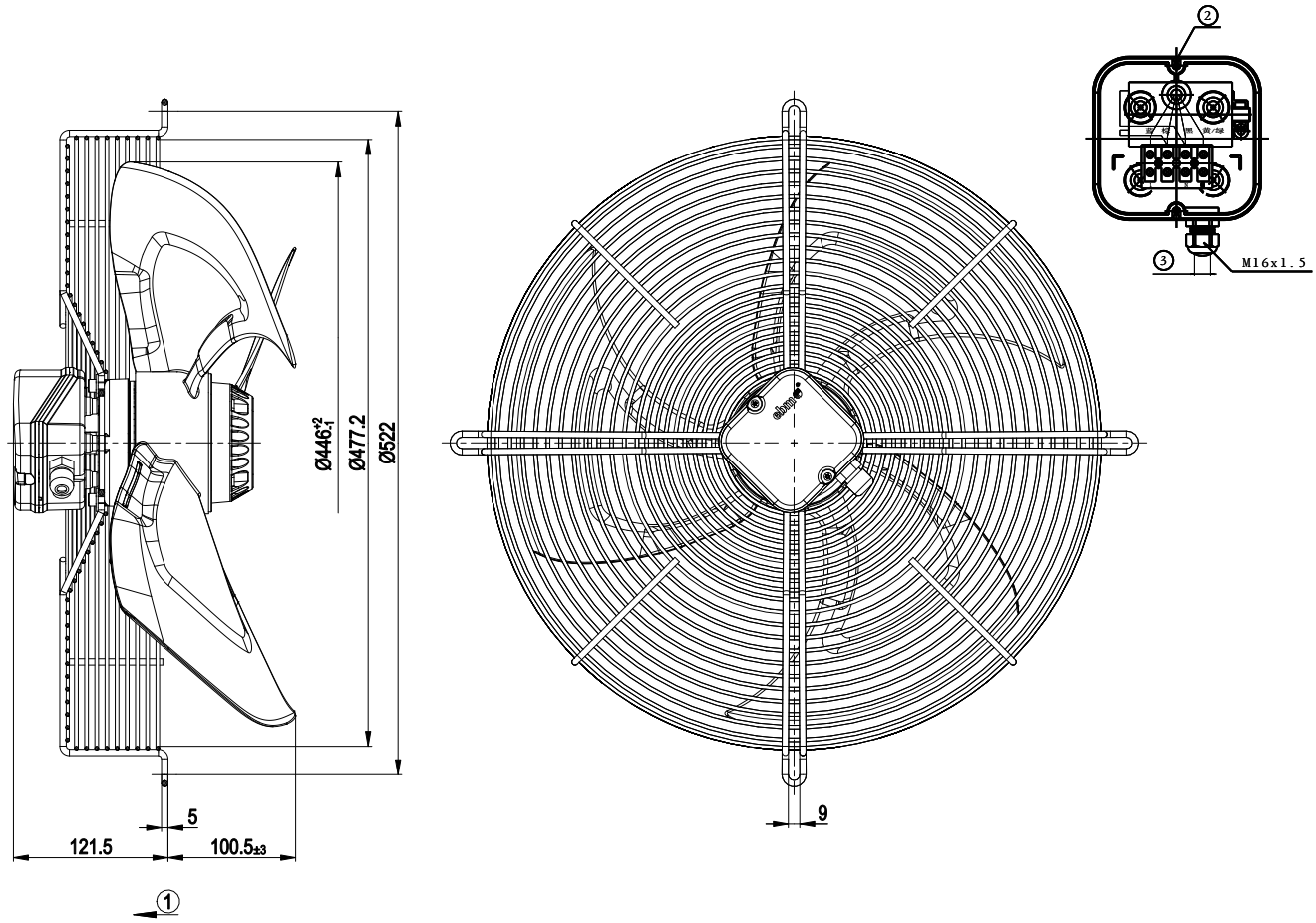

1	Direction of air flow "V"
2	Tightening torque 0.5 ± 0.1 Nm
3	Cable diameter max. 7.5 mm, tightening torque 1.3 ± 0.2 Nm

Connection diagram

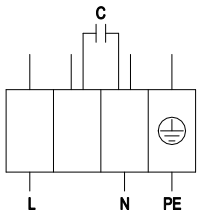

PE	green/yellow	L	black	N	blue

S6E450-AF08-29/F04

AC axial fan

blades with special design (K series)

with guard grille for short nozzle

Curves: Air performance 50 Hz

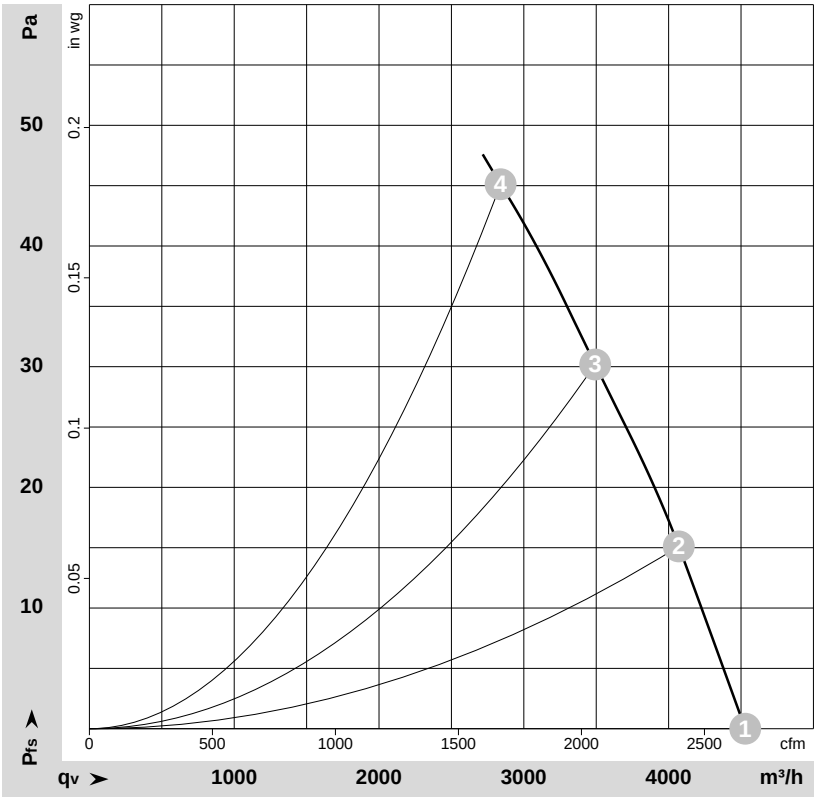

ρ = 1.15 kg/m³ ± 2 %

Measurement: LU-105020-1

Air performance measured according to ISO 5801 installation category A. For detailed information on the measurement setup, contact ebm-papst. Intake sound level: Sound power level according to ISO 13347 / sound pressure level measured at 1 m distance from fan axis. The values given are valid under the specified measuring conditions and may vary due to conditions of installation. For deviations from the standard configuration, the parameters have to be checked on the installed unit.

Measured values

	U	f	n	P_e	I	q_V	p_{fs}	q_V	p_{fs}
	V	Hz	min^{-1}	W	A	m^3/h	Pa	cfm	in. wg
1	230	50	890	140	0.62	4530	0	2665	0.00
2	230	50	895	141	0.62	4070	15	2395	0.06
3	230	50	880	145	0.63	3495	30	2055	0.12
4	230	50	865	151	0.66	2840	45	1670	0.18

U = Power supply · f = Frequency · n = Speed (rpm) · P_e = Power consumption · I = Current draw · q_V = Air flow · p_{fs} = Pressure increase