AC motor

M4E068-BF01-43 ebmpapst Datasheet FansCo

sales@fansco.com

www.fansco.com

Nominal data

Type	**M4E068-BF01-43**
Motor	**M4E068-BF**

Phase		1~	1~	1~
Nominal voltage	VAC	230	230	230
Frequency	Hz	50	60	60
Method of obtaining data		me	me	me
Valid for approval/standard		CE	CE	UL 2111
Speed (rpm)	min^{-1}	1200	1450	1450
Power consumption	W	61	61	66
Power output	W	19	25	26
Current draw	A	0.26	0.26	0.28
Rated torque	Ncm	15.5	16.4	17.5
Mean starting torque	Ncm	10.1	10.5	11.3
Capacitor	µF	1.5	1.5	1.5
Capacitor voltage	VDB	400	400	400
Min. ambient temperature	°C	-25	-25	-25
Max. ambient temperature	°C	-	-	-
Starting current	A	0.33	0.33	0.35

ml = Max. load · me = Max. efficiency · fa = Free air · cs = Customer specification · ce = Customer equipment
Subject to change

AC motor

Technical description

Weight	0.96 kg
Motor size	68
Rotor surface	Painted black
Direction of rotation	Clockwise, viewed toward rotor
Degree of protection	IP00
Insulation class	"B"
Moisture (F) / Environmental (H) protection class	H0 - dry environment
Max. permitted ambient temp. for motor (transport/storage)	+ 80 °C
Min. permitted ambient temp. for motor (transport/storage)	- 40 °C
Installation position	Any
Condensation drainage holes	None, open rotor
Mode	S1
Motor bearing	Ball bearing
Touch current according to IEC 60990 (measuring circuit Fig. 4, TN system)	< 0.75 mA
Motor protection	Thermal overload protector (TOP) internally connected
With cable	Variable
Protection class	I (with customer connection of protective earth)
Conformity with standards	EN 60335-1; CE
Approval	CSA C22.2 No. 77; UL 1004-3

M4E068-BF01-43 ebmpapst Datasheet FansCo sales@fansco.com www.fansco.com

AC motor

Product drawing

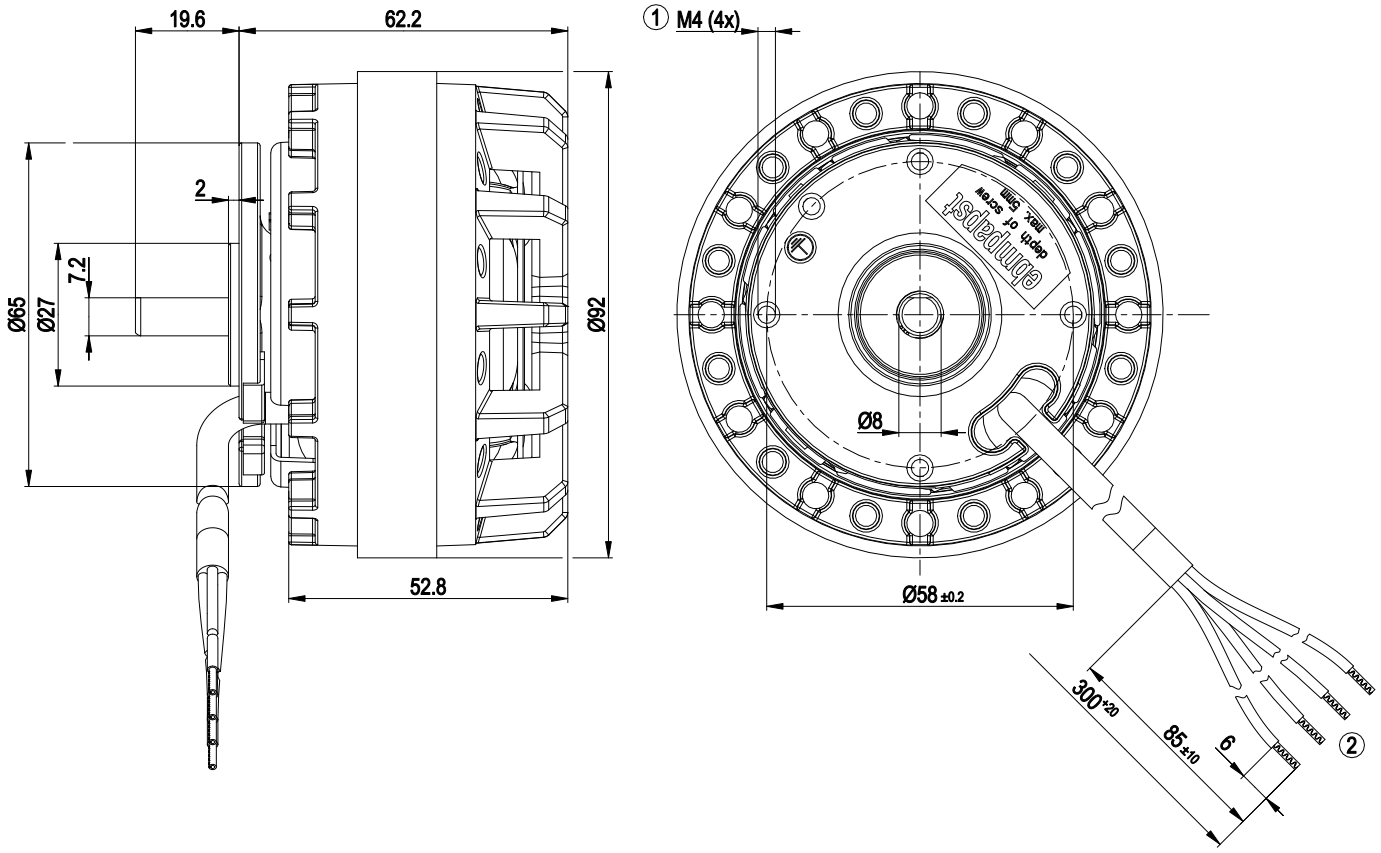

1	Max. clearance for screw 5 mm
2	Cable PVC AWG20, 4x crimped splices

Connection diagram

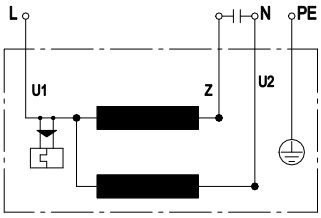

U1	blue	Z	brown	U2	black
PE	green/yellow				

M4E068-BF01-43 ebmpapst Datasheet FansCo sales@fansco.com www.fansco.com
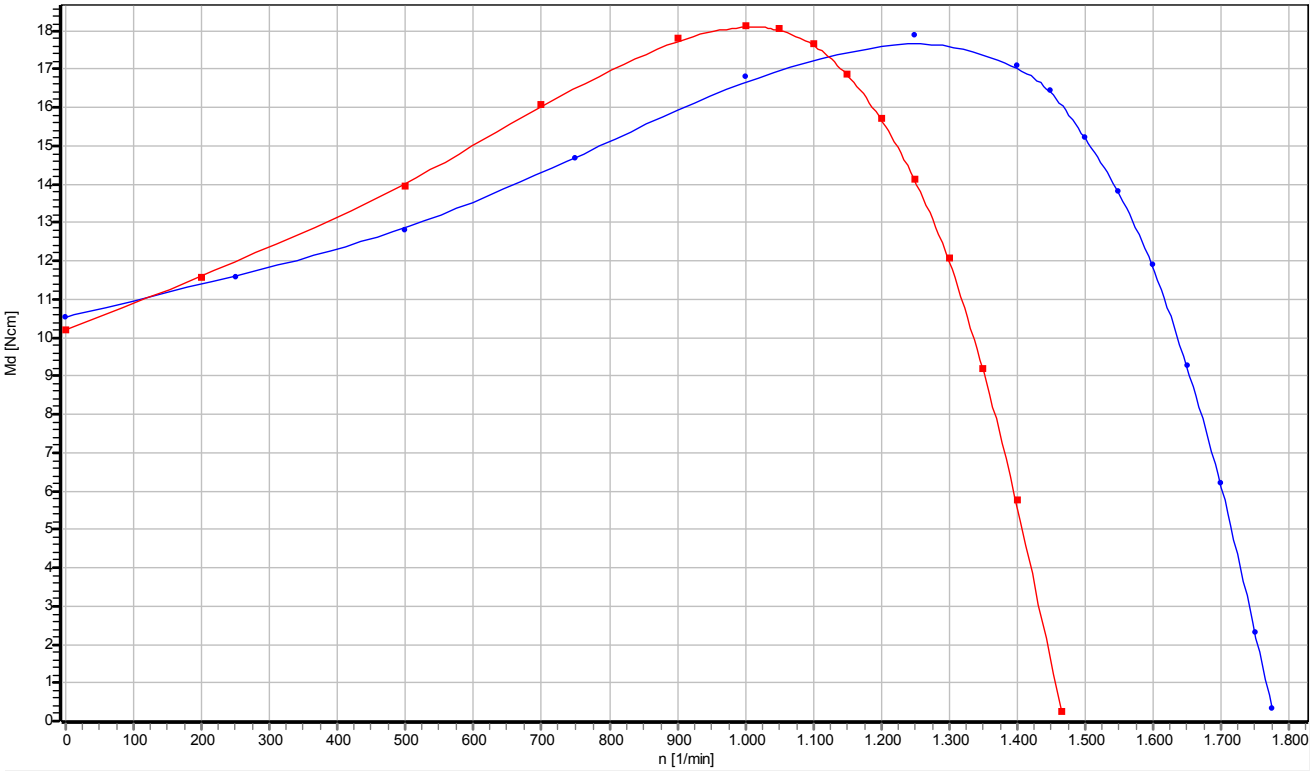
Curves: Speed (rpm)