K3G355-PH49-02

EC centrifugal module - RadiPac

backward-curved, single-intake

with support bracket

K3G355-PH49-02 ebmpapst Datasheet FansCo

sales@fansco.com

www.fansco.com

Nominal data

Type	**K3G355-PH49-02**
Motor	**M3G112-GA**

Phase		3~
Nominal voltage	VAC	400
Nominal voltage range	VAC	380 .. 480
Frequency	Hz	50/60
Method of obtaining data		ml
Speed	min^{-1}	2870
Power consumption	W	1900
Current draw	A	3
Min. ambient temperature	°C	-25
Max. ambient temperature	°C	40

ml = Max. load · me = Max. efficiency · fa = Free air · cs = Customer specification · ce = Customer equipment
Subject to change

Data according to ErP Directive

		Actual	Req. 2015
01 Overall efficiency η_{es}	%	68.8	54.4
02 Measurement category		A	
03 Efficiency category		Static	
04 Efficiency grade N		76.4	62
05 Variable speed drive		Yes	

09 Power consumption P_{ed}	kW	1.89
09 Air flow q_v	m³/h	4470
09 Pressure increase p_{fs}	Pa	991
10 Speed n	min^{-1}	2895
11 Specific ratio*		1.01

Data obtained at optimum efficiency level.
The ErP data is determined using a motor-impeller combination in a standardized measurement setup.

* Specific ratio = 1 + p_{fs} / 100 000 Pa

LU-174051

EC centrifugal module - RadiPac

backward-curved, single-intake

with support bracket

Technical description

Weight	23 kg
Fan size	355 mm
Rotor surface	Painted black
Electronics housing material	Die-cast aluminum
Impeller material	Sheet aluminum
Support plate material	Sheet steel, galvanized
Support bracket material	Steel, painted black
Number of blades	5
Direction of rotation	Clockwise, viewed toward rotor
Degree of protection	IP54
Insulation class	"B"
Moisture (F) / Environmental (H) protection class	H1
Max. permitted ambient temp. for motor (transport/storage)	+80 °C
Min. permitted ambient temp. for motor (transport/storage)	-40 °C
Installation position	See product drawing
Condensation drainage holes	On rotor side
Mode	S1
Motor bearing	Ball bearing
Technical features	- Output 10 VDC, max. 10 mA - Output 20 VDC, max. 50 mA - Output for slave 0-10 V - Operation and alarm display - Input for sensor 0-10 V or 4-20 mA - External 24 V input (parameter setting) - External release input - Alarm relay - Integrated PID controller - Power limiter - Motor current limitation - PFC, passive - RS-485 MODBUS-RTU - Soft start - Control input 0-10 VDC / PWM - Control interface with SELV potential safely disconnected from the mains - Thermal overload protection for electronics/motor - Line undervoltage / phase failure detection
Touch current according to IEC 60990 (measuring circuit Fig. 4, TN system)	<= 3.5 mA
Electrical hookup	Via terminal box
Motor protection	Thermal overload protector (TOP) internally connected
Protection class	I (with customer connection of protective earth)
Conformity with standards	EN 61800-5-1; CE
Approval	C22.2 No.77 + CAN/CSA-E60730-1; EAC; UL 1004-7 + 60730

EC centrifugal module - RadiPac

backward-curved, single-intake

with support bracket

Product drawing

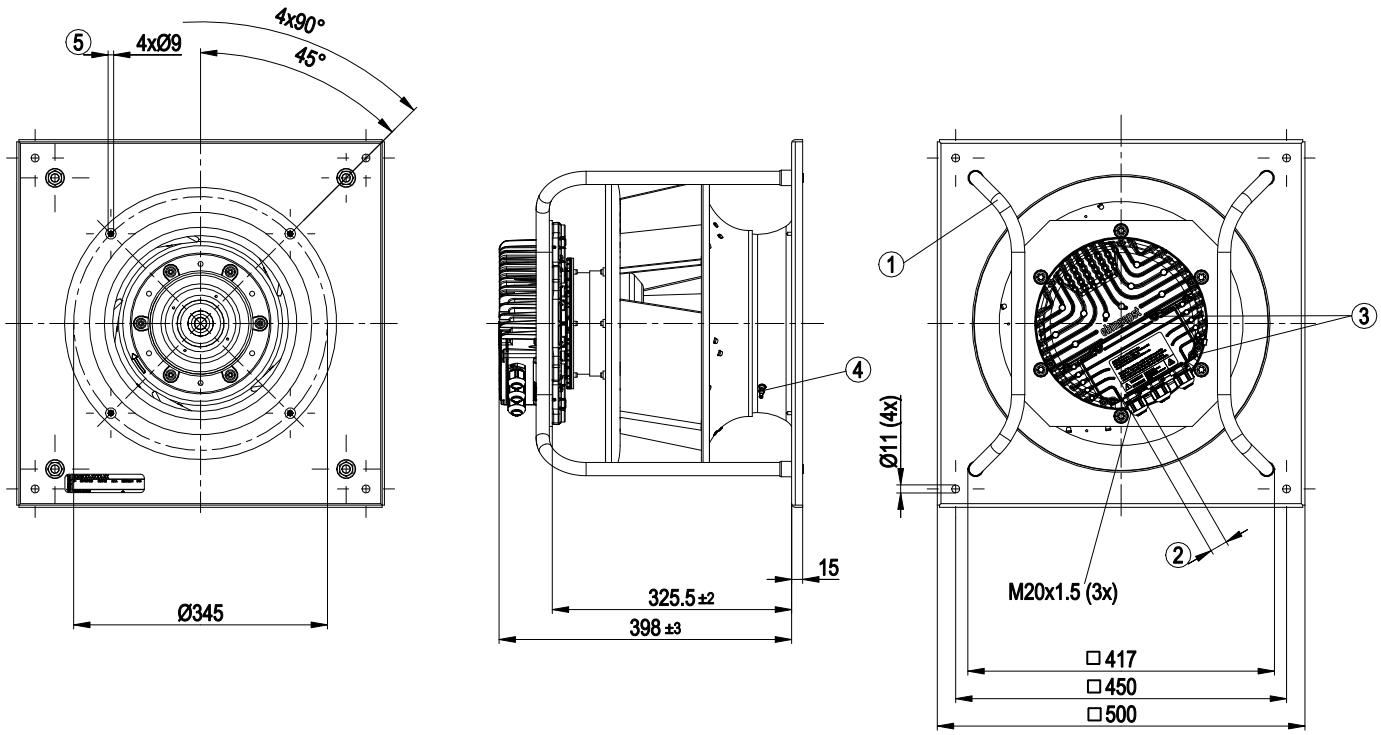

1	Installed position: shaft horizontal (install support struts only vertically as illustrated) or rotor on bottom; rotor on top on request
2	Cable diameter min. 4 mm, max. 10 mm, tightening torque 4 ± 0.6 Nm
3	Tightening torque 3.5 ± 0.5 Nm
4	Inlet ring with pressure tap (k-factor: 148)
5	Mounting holes for FlowGrid

EC centrifugal module - RadiPac

backward-curved, single-intake

with support bracket

Connection diagram

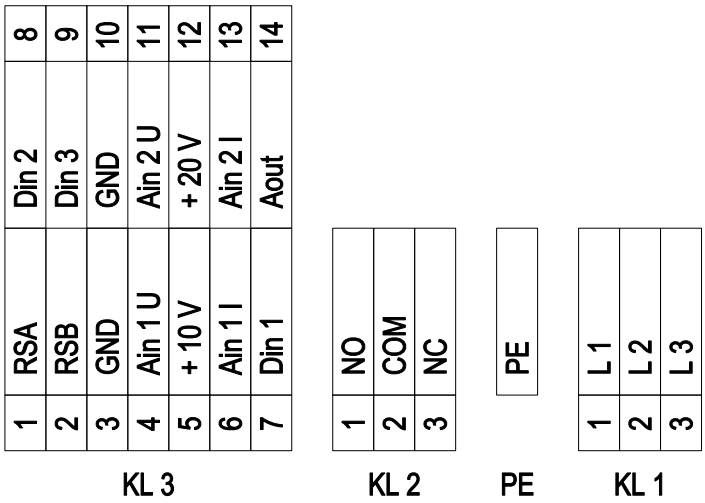

No.	Conn.	Designation	Function/assignment
KL 1	1	L1	Supply connection, power supply 3-phase 380-480 VAC, 50/60 Hz
KL 1	2	L2	Supply connection, power supply 3-phase 380-480 VAC, 50/60 Hz
KL 1	3	L3	Supply connection, power supply 3-phase 380-480 VAC, 50/60 Hz
PE		PE	Ground connection, PE connection
KL 2	1	NO	Status relay, floating status contact; make for failure
KL2	2	COM	Status relay, floating status contact; changeover contact; common connection; contact rating 250 VAC / max. 2 A (AC1) / min. 10 mA
KL2	3	NC	Status relay, floating status contact; break for failure
KL 3	1	RSA	Bus connection RS485, RSA, MODBUS-RTU; SELV
KL 3	2	RSB	Bus connection RS485, RSB, MODBUS-RTU; SELV
KL 3	3 / 10	GND	Reference ground for control interface; SELV
KL 3	4	Ain1 U	Analog input 1, set value: 0-10 V, Ri = 100 kΩ, adjustable curve, only usable as alternative to input Ain1 I; SELV
KL 3	5	+ 10 V	Fixed voltage output 10 VDC, +10 V ±3%, max. 10 mA, short-circuit-proof power supply for external devices (e.g. pot); SELV
KL 3	6	Ain1 I	Analog input 1, set value: 4-20 mA, Ri = 100 Ω, adjustable curve, only usable as alternative to input Ain1U; SELV
KL 3	7	Din1	Digital input 1: enable electronics, enable: pin open or applied voltage 5-50 VDC disable: bridge to GND or applied voltage < 1 VDC reset function: triggers software reset after a level change to < 1 VDC; SELV
KL 3	8	Din2	Digital input 2: Switching parameter sets 1/2, according to EEPROM setting, the valid or used parameter set can be selected via bus or via digital input DIN2. Parameter set 1: pin open or applied voltage 5-50 VDC Parameter set 2: bridge to GND or applied voltage < 1 VDC; SELV
KL 3	9	Din3	Digital input 3: according to EEPROM setting, the integrated controller's direction of action can be selected as normal/inverse via bus or digital input normal: pin open or applied voltage 5-50 VDC inverse: bridge to GND or applied voltage < 1 VDC; SELV
KL 3	11	Ain2 U	Analog input 2, measured value: 0-10 V, Ri = 100 kΩ, adjustable curve, only usable as alternative to input Ain2I; SELV
KL 3	12	+ 20 V	Fixed voltage output 20 VDC, +20 V +25/-10%, max. 50 mA, short-circuit-proof power supply for external devices (e.g. sensors); SELV

No.	Conn.	Designation	Function/assignment
KL 3	13	Ain2 I	Analog input 2, measured value: 4-20 mA, Ri = 100 Ω, adjustable curve, only usable as alternative to input Ain2U; SELV
KL 3	14	Aout	Analog output 0-10 VDC, max. 5 mA, output of current motor modulation level / motor speed adjustable curve; SELV

EC centrifugal module - RadiPac

backward-curved, single-intake

with support bracket

Curves: Air performance 50 Hz

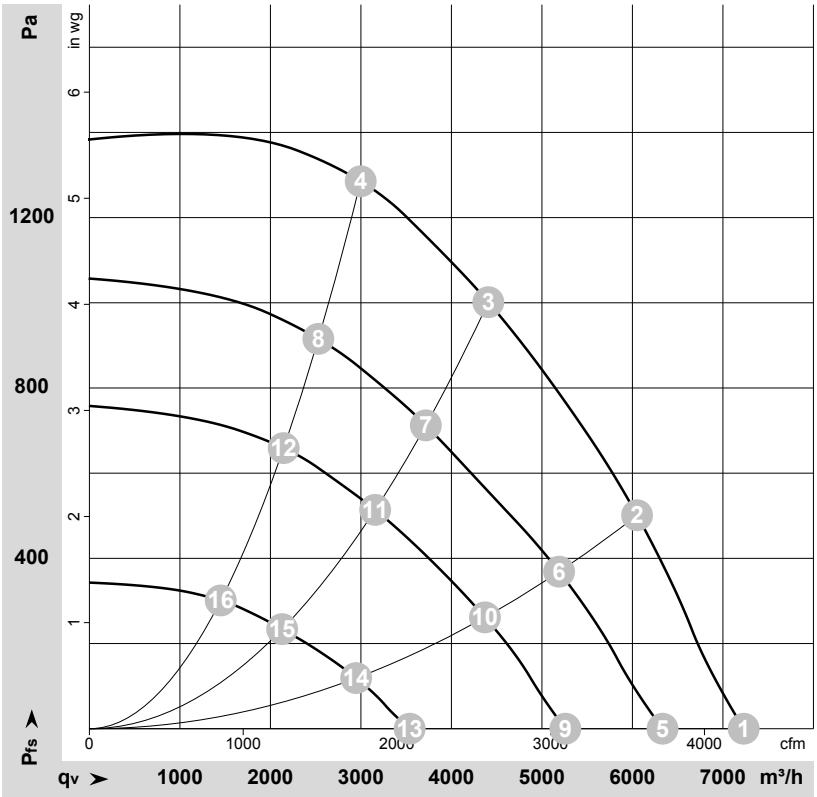

ρ = 1.15 kg/m³ ± 2 %

Measurement: LU-174051

Air performance measured according to ISO 5801 installation category A. For detailed information on the measurement setup, contact ebm-papst. Intake sound level: Sound power level according to ISO 13347 / sound pressure level measured at 1 m distance from fan axis. The values given are valid under the specified measuring conditions and may vary due to conditions of installation. For deviations from the standard configuration, the parameters have to be checked on the installed unit.

Measured values

	U	f	n	P_{ed}	I	LpA_{in}	LwA_{in}	LwA_{out}	qv	p_{fs}
	V	Hz	min^{-1}	W	A	dB(A)	dB(A)	dB(A)	m^3/h	Pa
1	400	50	2870	1046	1.69	85	92	94	7230	0
2	400	50	2870	1580	2.46	77	85	89	6050	500
3	400	50	2870	1900	3.00	73	81	86	4410	1000
4	400	50	2870	1887	2.92	79	86	89	3000	1300
5	400	50	2540	735	1.25	81	88	91	6335	0
6	400	50	2480	1024	1.65	73	81	85	5190	370
7	400	50	2440	1156	1.84	70	77	82	3715	714
8	400	50	2440	1142	1.82	75	81	85	2530	923
9	400	50	2130	468	0.88	77	85	87	5260	0
10	400	50	2090	649	1.14	70	78	82	4370	262
11	400	50	2070	738	1.25	66	73	79	3155	515
12	400	50	2070	737	1.25	71	77	81	2145	665
13	400	50	1440	179	0.41	65	75	76	3540	0
14	400	50	1415	232	0.50	60	68	73	2945	119
15	400	50	1400	260	0.54	57	65	70	2130	234
16	400	50	1400	262	0.54	60	67	72	1450	304

U = Power supply · f = Frequency · n = Speed · P_{ed} = Power consumption · I = Current draw · LpA_{in} = Sound pressure level intake side · LwA_{in} = Sound power level intake side
LwA_{out} = Sound power level outlet side · qv = Air flow · p_{fs} = Pressure increase

K3G355-PH49-02 ebmpapst Datasheet FansCo sales@fansco.com www.fansco.com