A3G800-AU25-01

EC axial fan - HyBlade

sickled blades (S series)

A3G800-AU25-01 ebmpapst Datasheet

sales@fansco.com

www.fansco.com

Nominal data

Type	**A3G800-AU25-01**
Motor	**M3G150-IF**

Phase		3~
Nominal voltage	VAC	400
Nominal voltage range	VAC	380 .. 480
Frequency	Hz	50/60
Type of data definition		ml
Speed (rpm)	min^{-1}	1020
Power input	W	2560
Current draw	A	3.9
Max. back pressure	Pa	230
Min. ambient temperature	°C	-25
Max. ambient temperature	°C	70

ml = Max. load · me = Max. efficiency · fa = Running at free air · cs = Customer specs · cu = Customer unit
Subject to alterations

Data in accordance with ecodesign regulation EU 327/2011 (EN 17166)

		Actual	Request 2015
01 Overall efficiency η_{es}	%	47.6	35.8
02 Measurement category		A	
03 Efficiency category		Static	
04 Efficiency grade N		51.8	40
05 Variable speed drive		Yes	

09 Power input P_{ed}	kW	2.18
09 Air flow q_v	m³/h	17625
09 Pressure increase p_{fs}	Pa	200
10 Speed (rpm) n	min^{-1}	1025
11 Specific ratio*		1.00

Data definition with optimum efficiency.

* Specific ratio = 1 + p_{fs} / 100 000 Pa

LU-170392

The indicated efficiency values for obtaining conformity with the Ecodesign Directive EU 327/2011 were achieved with defined air conduction components (e.g. inlet nozzles).
The dimensions are to be requested from ebm-papst. If other air guide geometries are used on the installation side, the ebm-papst evaluation loses its validity/conformity must be confirmed again.

The product does not fall within the scope of Regulation (EU) 2019/1781 due to the exception specified in Article 2(2a) (motors completely integrated into a product).

EC axial fan - HyBlade

sickled blades (S series)

Technical features

Mass	26 kg
Size	800 mm
Motor size	150
Surface of rotor	Coated in black
Material of electronics housing	Die-cast aluminium, coated in black
Material of blades	Aluminium sheet insert, sprayed with PP plastic
Number of blades	5
Blade angle	0
Direction of air flow	V
Direction of rotation	Clockwise, seen on rotor
Type of protection	IP55
Insulation class	"F"
Humidity (F) / environmental protection class (H)	H2
Max. permissible ambient motor temp. (transp./ storage)	+80 °C
Min. permissible ambient motor temp. (transp./storage)	-40 °C
Mounting position	Shaft horizontal or rotor on bottom; rotor on top on request
Condensation drainage holes	Rotor-side
Operation mode	S1
Motor bearing	Ball bearing
Technical features	- Output 10 VDC, max. 10 mA - Output 20 VDC, max. 50 mA - Output for slave 0-10 V - Input for sensor 0-10 V or 4-20 mA - External 24 V input (programming) - External release input - Alarm relay - Integrated PID controller - Output limit - Motor current limit - PFC, passive - RS485 MODBUS RTU - Soft start -Maximum EEPROM write cycles 100,000 - Control input 0-10 VDC / PWM - Control interface with SELV potential safely disconnected from the mains - Over-temperature protected electronics / motor - Line undervoltage / phase failure detection
EMC interference immunity	Acc. to EN 61000-6-2 (industrial environment)
EMC interference emission	Acc. to EN 61000-6-3 (household environment), except EN 61000-3-2 for professionally used devices with a total rated power greater than 1 kW
Touch current acc. IEC 60990 (measuring network Fig. 4, TN system)	<= 3.5 mA
Electrical connection	Terminal box
Motor protection	Reverse polarity and locked-rotor protection
Protection class	I (if protective earth is connected by customer)

A3G800-AU25-01 ebmpapst Datasheet sales@fansco.com www.fansco.com

Product conforming to standard	EN 61800-5-1; CE
Standard conformity	UKCA
Approval	CSA C22.2 no. 77 + CAN/CSA-E60730-1; EAC; UL 1004-7 + 60730-1
Remark	Perm. operating altitude up to max. 4000 m above sea level as per DIN 61800-5-1_2008_Sect. 4.3.6.4.1 Overvoltage category II. Up to 2000 m above sea level Overvoltage category III applies.

EC axial fan - HyBlade

sickled blades (S series)

Product drawing

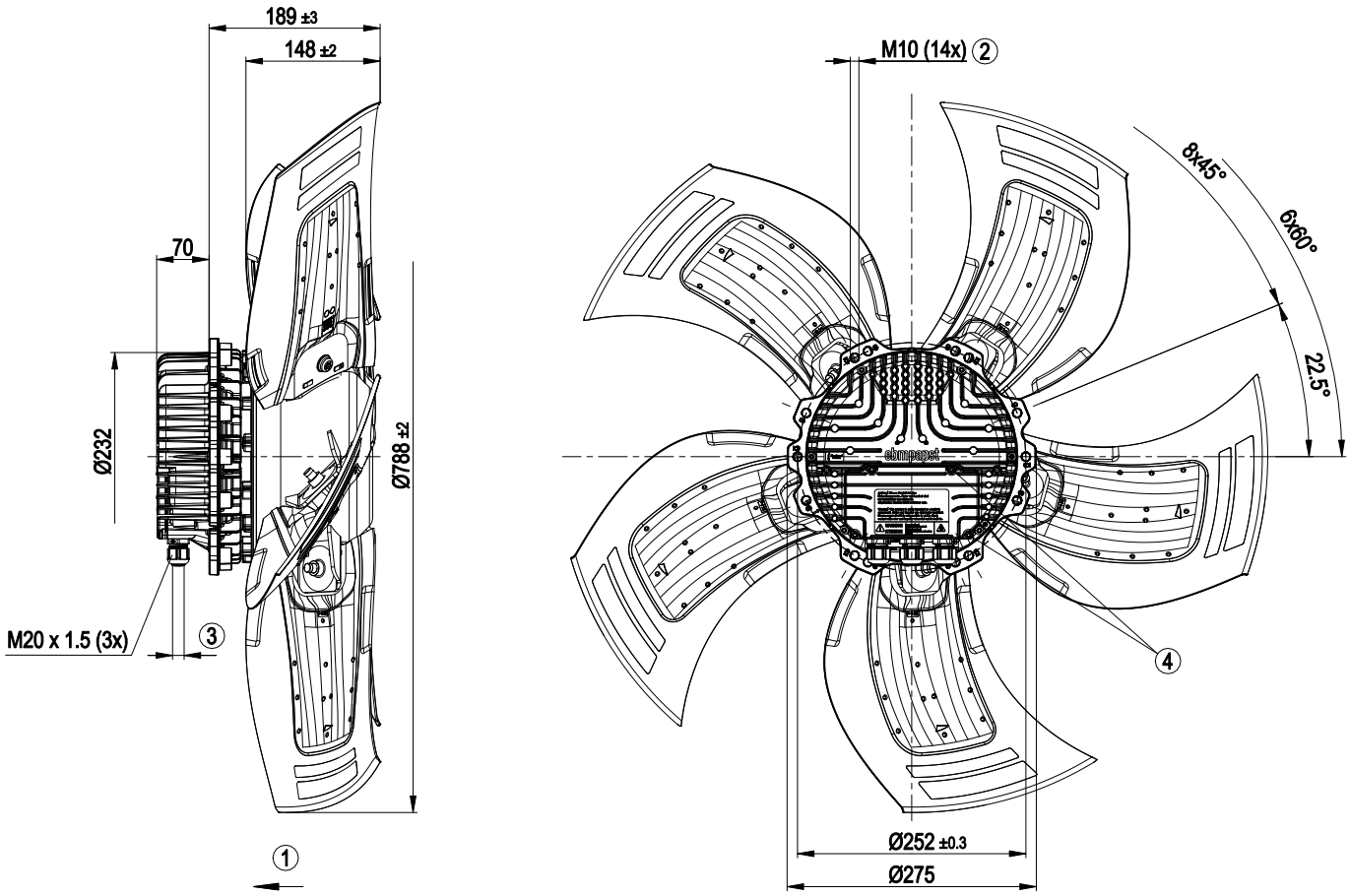

1	Direction of air flow "V"
2	Depth of screw max. 25 mm
3	Cable diameter min. 4 mm, max. 10 mm, tightening torque 4±0.6 Nm
4	Tightening torque 3.5±0.5 Nm

A3G800-AU25-01 ebmpapst Datasheet sales@fansco.com www.fansco.com

EC axial fan - HyBlade

sickled blades (S series)

Connection screen

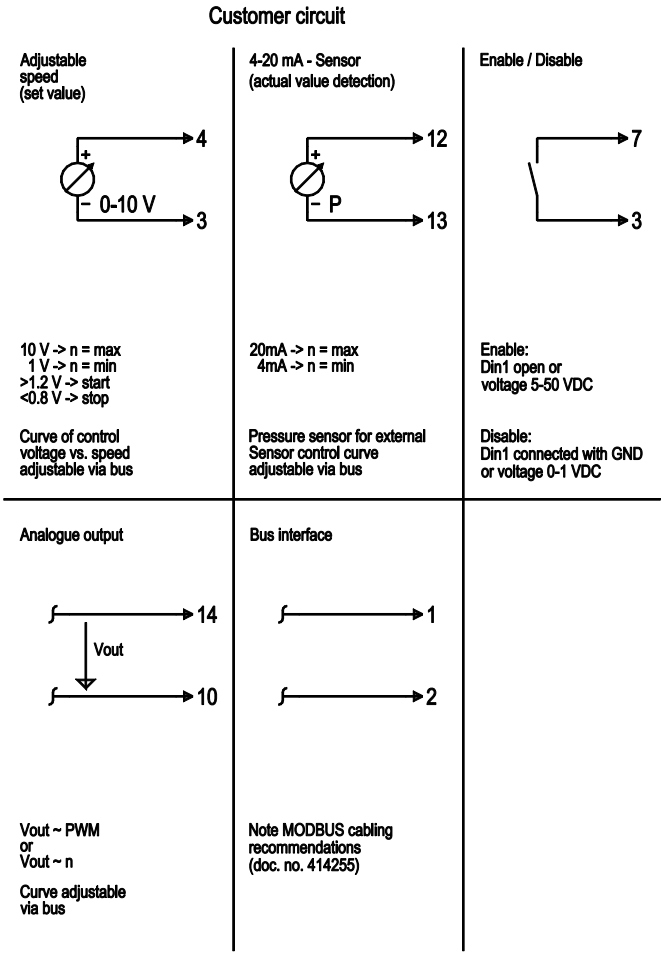

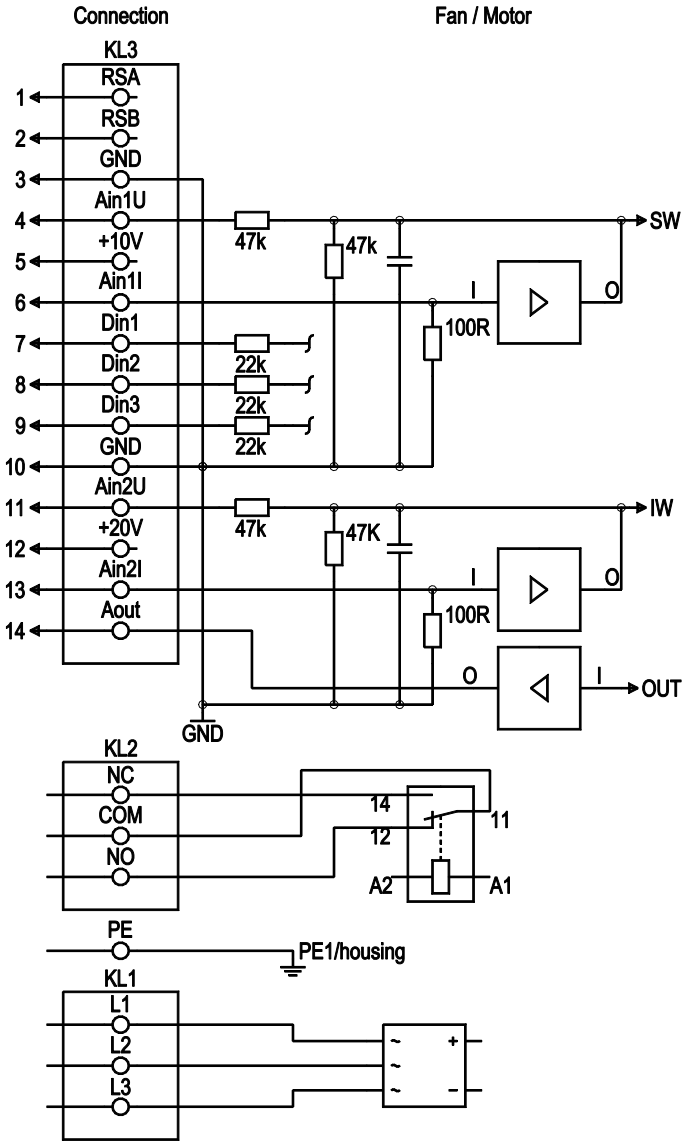

Terminal box connection diagram

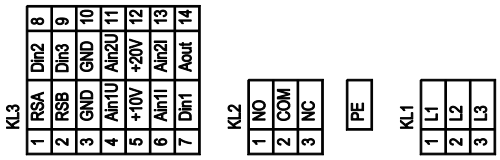

No.	Conn.	Designation	Function / assignment
KL 1	1	L1	Mains connection, power supply; see technical data for nominal voltage range
KL 1	2	L2	Mains connection, power supply; see technical data for nominal voltage range
KL 1	3	L3	Mains connection, power supply; see technical data for nominal voltage range
PE		PE	Earth connection, PE connection
KL 2	1	NO	Status relay, floating status contact, make for failure
KL2	2	COM	Status relay, floating status contact, changeover contact, common connection, contact rating 250 VAC / max. 2 A (AC1) / min. 10 mA
KL2	3	NC	Status relay, floating status contact, break for failure
KL 3	1	RSA	Bus connection RS-485, RSA, MODBUS RTU; SELV
KL 3	2	RSB	Bus connection RS-485, RSB, MODBUS RTU; SELV
KL 3	3 / 10	GND	Signal ground for control interface; SELV
KL 3	4	Ain1 U	Analogue input 1, set value: 0-10 V, Ri = 100 kΩ, parametrisable curve, only usable as alternative to input Ain1; SELV

A3G800-AU25-01 ebmpapst Datasheet sales@fansco.com www.fansco.com

No.	Conn.	Designation	Function / assignment
KL 3	5	+ 10 V	Fixed voltage output 10 VDC, +10 V ±3%, max. 10 mA, short-circuit-proof, power supply for external devices (e.g. potentiometer); SELV
KL 3	6	Ain1 I	Analogue input 1, set value: 4-20 mA; Ri = 100 Ω, parametrisable curve, only usable as alternative to input Ain1 U; SELV
KL 3	7	Din1	Digital input 1: enabling of electronics, enabling: open pin or applied voltage 5-50 VDC disabling: bridge to GND or applied voltage <1 VDC reset function: triggers software reset after a level change to <1 VDC; SELV
KL 3	8	Din2	Digital input 2: parameter set switch 1/2, according to EEPROM setting, the valid/used parameter set can be selected via bus or via digital input DIN2. Parameter set 1: open pin or applied voltage 5-50 VDC Parameter set 2: bridge to GND or applied voltage <1 VDC; SELV
KL 3	9	Din3	Digital input 3: controller function of integrated controller, according to EEPROM setting, the controller function of the integrated controller is normally/inversely selectable per bus or per digital input Din 3 normal: open pin or applied voltage 5-50 VDC inverse: bridge to GND or applied voltage <1 VDC; SELV
KL 3	11	Ain2 U	Analogue input 2, actual value: 0-10 V, Ri = 100 kΩ, parametrisable curve, only usable as alternative to input Ain2; SELV
KL 3	12	+ 20 V	Fixed voltage output 20 VDC; +20 V +25/-10%, max. 50 mA; short-circuit-proof; supply voltage for external devices (e.g. sensors); SELV Alternatively: +24 VDC input for parametrization without mains power
KL 3	13	Ain2 I	Analogue input 2, actual value: 4-20 mA, Ri = 100 Ω, parametrisable curve, only usable as alternative to input Ain2 U; SELV
KL 3	14	Aout	Analogue output 0-10 VDC, max. 5 mA, output of the current motor level control coefficient / motor speed parametrisable curve; SELV

EC axial fan - HyBlade

sickled blades (S series)

Charts: Air flow 50 Hz

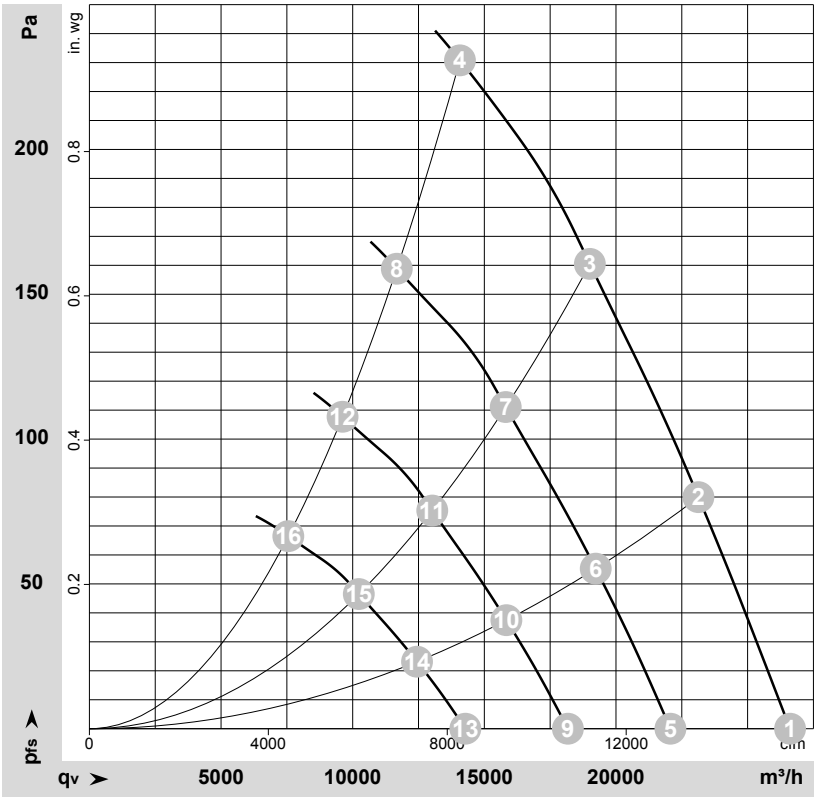

ρ = 1.15 kg/m³ ± 2 %

Measurement: LU-136917-1

Air performance measured as per ISO 5801 Installation category A. For detailed information on the measuring set-up, please contact ebm-papst. Suction-side noise levels: LwA measured as per ISO 13347 / LpA measured with 1m distance to fan axis. The values given are valid under the measuring conditions mentioned above and may vary according to the actual installation situation. With any deviation from the standard set-up, the specific values have to be checked and reviewed with the unit installed.

Measured values

	U	f	n	P_{ed}	I	LpA_{in}	LwA_{in}	LwA_{out}	q_V	p_{fs}	q_V	p_{fs}
	V	Hz	min^{-1}	W	A	dB(A)	dB(A)	dB(A)	m^3/h	Pa	cfm	in. wg
1	400	50	1020	1585	2.74	68	75	75	26610	0	15665	0.00
2	400	50	1020	1892	3.19	67	74	74	23130	80	13615	0.32
3	400	50	1020	2154	3.58	70	77	75	19010	160	11190	0.64
4	400	50	1020	2560	3.90	75	83	82	14075	230	8285	0.92
5	400	50	850	904	1.56	63	70	71	22070	0	12990	0.00
6	400	50	850	1087	1.83	63	70	69	19230	55	11320	0.22
7	400	50	850	1240	2.06	65	72	71	15815	111	9305	0.45
8	400	50	850	1417	2.33	71	78	78	11675	159	6870	0.64
9	400	50	700	505	0.87	58	65	66	18175	0	10695	0.00
10	400	50	700	607	1.02	58	65	64	15835	37	9320	0.15
11	400	50	700	693	1.15	60	67	66	13020	75	7665	0.30
12	400	50	700	792	1.30	66	73	73	9615	108	5660	0.43
13	400	50	550	245	0.42	52	59	60	14280	0	8405	0.00
14	400	50	550	295	0.50	52	59	58	12445	23	7325	0.09
15	400	50	550	336	0.56	54	61	60	10230	46	6020	0.18
16	400	50	550	384	0.63	60	67	67	7555	66	4445	0.26

U = Supply voltage · f = Frequency · n = Speed (rpm) · P_{ed} = Power input · I = Current draw · LpA_{in} = Sound pressure level inlet side · LwA_{in} = Sound power level inlet side · LwA_{out} = Sound power level outlet side
q_V = Air flow · p_{fs} = Pressure increase

A3G800-AU25-01 ebmpapst Datasheet sales@fansco.com www.fansco.com