8300101557

VAY0630NSNJS

EC axial panel fan - AxiTone

sickle-shaped blades (S series)

ebm-papst Mulfingen GmbH & Co. KG
Bachmühle 2 · D-74673 Mulfingen
Phone +49 7938 81-0
Fax +49 7938 81-110
info1@de.fansco.com
www.fansco.com

Limited partnership · Headquarters Mulfingen
Amtsgericht (court of registration) Stuttgart · HRA 590344

General partner Elektrobau Mulfingen GmbH · Headquarters Mulfingen
Amtsgericht (court of registration) Stuttgart · HRB 590142

Nominal data

Item	**8300101557**
Motor	**E07433-43**

Phase		1~
Nominal voltage	VAC	230
Nominal voltage range	VAC	200 .. 240
Frequency	Hz	50/60

Method of obtaining data		ml
Status		prelim.
Speed (rpm)	min^{-1}	500
Power consumption	W	115
Current draw	A	1.0
Max. back pressure	Pa	36
Max. back pressure	in. wg	0.14
Min. ambient temperature	°C	-25
Max. ambient temperature	°C	60

ml = Max. load · me = Max. efficiency · fa = Free air · cs = Customer specification · ce = Customer equipment
Subject to change

EC axial panel fan - AxiTone

sickle-shaped blades (S series)

Technical description

Size	630 mm
Motor size	74
Rotor surface	Thick-film passivated
Electronics housing material	Die-cast aluminum
Impeller material	PP plastic
Number of blades	3
Airflow direction	A
Direction of rotation	Counterclockwise, viewed toward rotor
Degree of protection	IP54
Insulation class	"B"
Moisture (F) / Environmental (H) protection class	H1
Max. permitted ambient temp. for motor (transport/storage)	+80 °C
Min. permitted ambient temp. for motor (transport/storage)	-40 °C
Installation position	Any
Condensation drainage holes	None, open rotor
Mode	S1
Motor bearing	Ball bearing
Technical features	- Output 10 VDC, max. 10 mA - Locked-rotor detection - Tach output - Speed control - Power limiter - Motor current limitation - Soft start - Control input 0-10 VDC / PWM - Control interface with SELV potential safely disconnected from the mains - Overvoltage detection - Thermal overload protection for electronics/motor - Line undervoltage detection
Touch current according to IEC 60990 (measuring circuit Fig. 4, TN system)	<= 3.5 mA
Motor protection	Electronic motor protection
With cable	Variable
Protection class assignment	I; If a protective earth is connected. The built-in component has several local protection class assignments. The final protection class is determined by the intended installation.
Conformity with standards	EN 60335-1; EN 60034-1; EN 60204-1; CE; UKCA
Approval	UL 1004-7 + 60730-1; CSA C22.2 No. 77 + CAN/CSA-E60730-1

ebm-papst Mulfingen GmbH & Co. KG · Bachmühle 2 · D-74673 Mulfingen · Phone +49 (0) 7938 81-0 · Fax +49 (0) 7938 81-110 · info1@de.fansco.com · www.fansco.com

EC axial panel fan - AxiTone

sickle-shaped blades (S series)

Product drawing

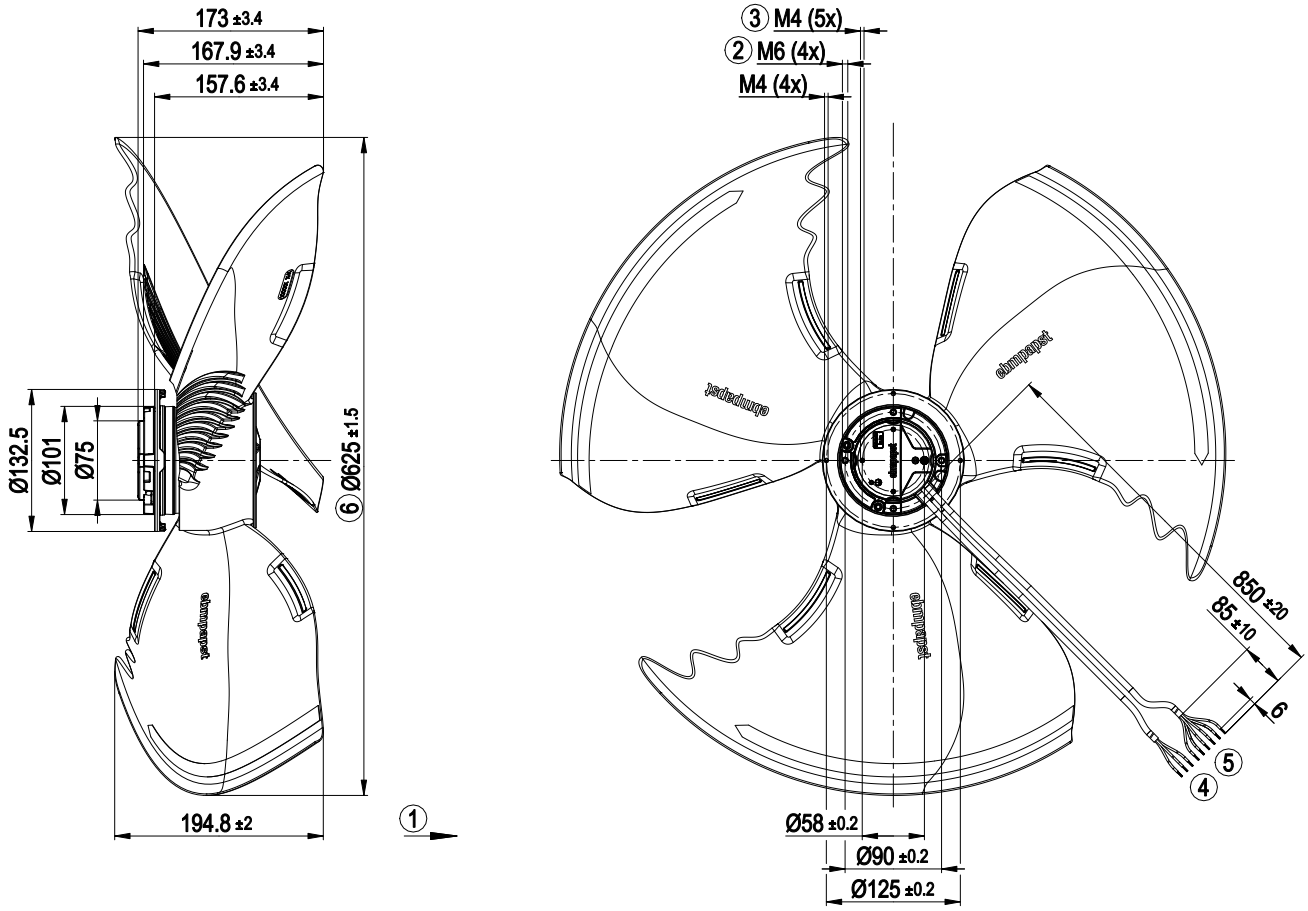

1	Direction of air flow "A"
2	Max. clearance for screw 10 mm
3	Max. clearance for screw 5 mm
4	Supply line (PWR) PVC AWG20
	3x splice
5	Control wire (CTRL) PVC AWG22
	6x splice
6	The diameter of the impeller becomes larger than indicated on the drawing due to the centrifugal forces during operation. The dimension indicated refers to the condition on delivery.

ebm-papst Mulfingen GmbH & Co. KG · Bachmühle 2 · D-74673 Mulfingen · Phone +49 (0) 7938 81-0 · Fax +49 (0) 7938 81-110 · info1@de.fansco.com · www.fansco.com

Connection diagram

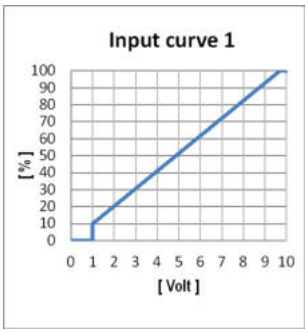

No.	Conn.	Designation	Color	Function/assignment
	PWR	L	black	Power supply, phase, see nameplate for voltage range
	PWR	N	blue	Power supply, neutral conductor, see nameplate for voltage range
	PWR	PE	green/yellow	Protective earth
	CTRL	GND	blue	Reference ground for control interface, SELV
	CTRL	IO1	yellow	Factory setting: Analog input 0-10 V/PWM, Ri=100 KΩ, fPWM=1 kHz..10 kHz, Function: Speed set value Characteristic curve parameterizable (see "Input curve 1"), SELV Function parameterizable at the factory (see Optional interface functions table)
	CTRL	IO2	white	Factory setting: Open collector output, Umax=50 VDC, Imax= 10 mA, function: Tach output 1 pulse/revolution, SELV Function parameterizable at factory (see table Optional interface functions)
	CTRL	Vout	red	Voltage output 10 VDC +/-3%, Imax=10 mA Short-circuit-proof, power supply for external devices, SELV
	CTRL	-	gray	No function
	CTRL	-	brown	No function

ebm-papst Mulfingen GmbH & Co. KG · Bachmühle 2 · D-74673 Mulfingen · Phone +49 (0) 7938 81-0 · Fax +49 (0) 7938 81-110 · info1@de.fansco.com · www.fansco.com

Terminal/plug assignment

Basic (B4)

Factory configuration option upon request

○ *factory configuration option*

	configurable IO mode	electrical specification	INPUT: source: set value	INPUT: switch: parameter set: #1 / #2	INPUT: switch: direction of rotation: cw / ccw	INPUT: switch: enable/disable input	INPUT: configurable function	OUTPUT: signal: tach out	OUTPUT: signal: diagnostics out	OUTPUT: signal: alarm out	OUTPUT: signal: run monitoring	OUTPUT: signal: status	OUTPUT: signal: configurable function
IO1	○ **Din1 (high active)**: digital input	active: parameterizable voltage x - 30 VDC not active: pin open or parameterizable voltage < x VDC, SELV		○	○	○	○						
	○ **Ain1 0-10 V/PWM:** analog input	Ri = 100 kΩ, characteristic curve parameterizable, f_{PWM} = 1 k - 10 kHz, SELV	○				○						
IO2	○ **Tach out** (open collector)	Umax = 50 VDC, Imax = 10 mA, SELV						○					
	○ **Diagnostics out** (open collector)	Umax = 50 VDC, Imax = 10 mA, SELV							○				
	○ **Alarm out** (open collector)	Umax = 50 VDC, Imax = 10 mA, SELV								○			
	○ **Open collector**	Umax = 50 VDC, Imax = 10 mA, SELV									○	○	○
Vout	**Voltage output**	Voltage 10 VDC, SELV											

ebm-papst Mulfingen GmbH & Co. KG · Bachmühle 2 · D-74673 Mulfingen · Phone +49 (0) 7938 81-0 · Fax +49 (0) 7938 81-110 · info1@de.fansco.com · www.fansco.com

8300101557

VAY0630NSNJS

EC axial panel fan - AxiTone

sickle-shaped blades (S series)

Curves: Air performance 50 Hz

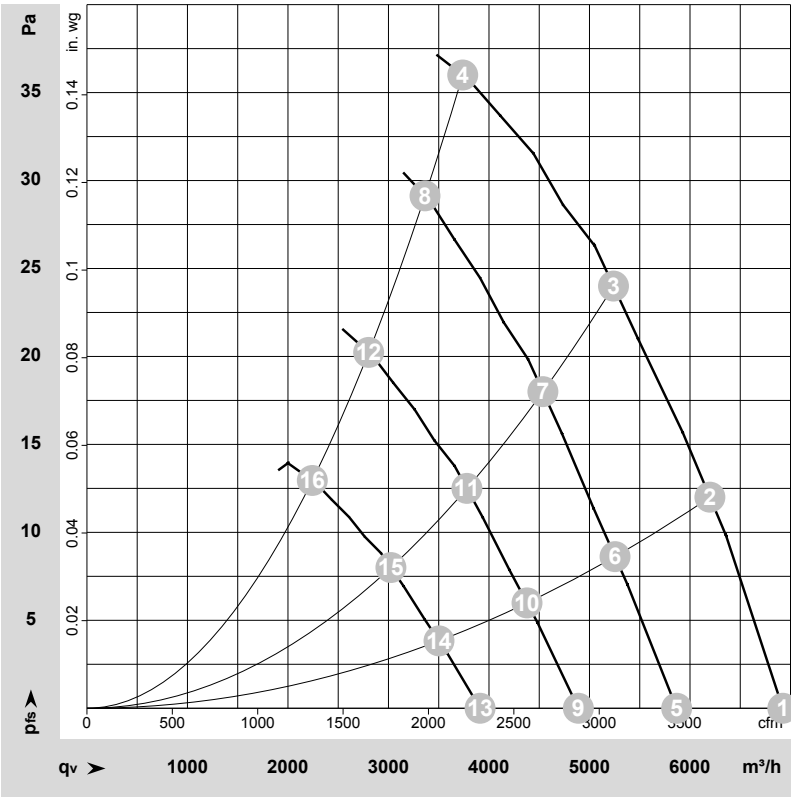

ρ = 1.15 kg/m³ ± 2 %

Measurement: LU-234256-1
Date: 2024-11-12
Housing: 10633-2-4037

Air performance measured according to ISO 5801 installation category A. For detailed information on the measurement setup, contact ebm-papst. Intake sound level: Sound power level according to ISO 13347 / sound pressure level measured at 1 m distance from fan axis. The values given are valid under the specified measuring conditions and may vary due to conditions of installation. For deviations from the standard configuration, the parameters have to be checked on the installed unit.

Measured values

	Wired	U	f	n	P_e	I	LpA_{in}	LwA_{in}	LwA_{out}	LwA	q_V	p_{fs}	q_V	p_{fs}
		V	Hz	min^{-1}	W	A	dB(A)	dB(A)	dB(A)	dB	m^3/h	Pa	cfm	in. wg
1	1~	230	50	530	88	0.76	46	52	50	54	6925	0	4075	0.00
2	1~	230	50	530	101	0.87	43	49	48	51	6200	12	3650	0.05
3	1~	230	50	520	107	0.93	40	46	46	49	5240	24	3085	0.10
4	1~	230	50	500	114	0.99	43	49	49	52	3740	36	2200	0.14
5	1~	230	50	450	53	0.46	42	47	46	50	5865	0	3455	0.00
6	1~	230	50	450	62	0.53	39	45	44	47	5255	9	3090	0.04
7	1~	230	50	450	70	0.60	37	42	42	45	4535	18	2670	0.07
8	1~	230	50	450	83	0.72	40	47	47	50	3365	29	1980	0.12
9	1~	230	50	375	31	0.27	37	43	42	45	4890	0	2880	0.00
10	1~	230	50	375	36	0.31	34	40	39	43	4380	6	2575	0.02
11	1~	230	50	375	40	0.35	32	38	38	41	3780	12	2225	0.05
12	1~	230	50	375	48	0.42	35	42	42	45	2805	20	1650	0.08
13	1~	230	50	300	16	0.14	32	37	36	40	3910	0	2300	0.00
14	1~	230	50	300	18	0.16	29	34	34	37	3505	4	2060	0.02
15	1~	230	50	300	21	0.18	27	32	32	35	3025	8	1780	0.03
16	1~	230	50	300	25	0.21	30	37	37	40	2240	13	1320	0.05

Wired = Wiring · U = Voltage · f = Frequency · n = Speed (rpm) · P_e = Power consumption · I = Current draw · LpA_{in} = Sound pressure level intake side · LwA_{in} = Sound power level intake side
LwA_{out} = Sound power level outlet side · q_V = Air flow · p_{fs} = Pressure increase

ebm-papst Mulfingen GmbH & Co. KG · Bachmühle 2 · D-74673 Mulfingen · Phone +49 (0) 7938 81-0 · Fax +49 (0) 7938 81-110 · info1@de.fansco.com · www.fansco.com