**8300101419**

VBH0206SSLDS

# EC centrifugal module - RadiCal

backward-curved, single-intake

with housing

**ebm-papst Mulfingen GmbH & Co. KG**
Bachmühle 2 · D-74673 Mulfingen
Phone +49 7938 81-0
Fax +49 7938 81-110
info1@de.fansco.com
www.fansco.com

Limited partnership · Headquarters Mulfingen
Amtsgericht (court of registration) Stuttgart · HRA 590344

General partner Elektrobau Mulfingen GmbH · Headquarters Mulfingen
Amtsgericht (court of registration) Stuttgart · HRB 590142

## Nominal data

| | |
|---|---|
| **Item** | **8300101419** |
| **Motor** | **E06001-17** |

| | | |
|---|---|---|
| Phase | | 1~ |
| Nominal voltage | VAC | 230 |
| Nominal voltage range | VAC | 200 .. 240 |
| Frequency | Hz | 50/60 |

| | | |
|---|---|---|
| Method of obtaining data | | ml |
| Speed (rpm) | $min^{-1}$ | 2900 |
| Power consumption | W | 85 |
| Current draw | A | 0.7 |
| Min. ambient temperature | °C | -25 |
| Max. ambient temperature | °C | 60 |

ml = Max. load · me = Max. efficiency · fa = Free air · cs = Customer specification · ce = Customer equipment
Subject to change

# EC centrifugal module - RadiCal

backward-curved, single-intake
with housing

## Technical description

| | |
|---|---|
| **Size** | 206 mm |
| **Motor size** | 60 |
| **Rotor surface** | Thick-film passivated |
| **Electronics housing material** | Die-cast aluminum |
| **Impeller material** | PP plastic |
| **Housing material** | PP plastic |
| **Flowgrid material** | PP plastic |
| **Number of blades** | 7 |
| **Direction of rotation** | Clockwise, viewed toward rotor |
| **Degree of protection** | IP54 |
| **Insulation class** | "B" |
| **Moisture (F) / Environmental (H) protection class** | H1 |
| **Max. permitted ambient temp. for motor (transport/storage)** | + 80 °C |
| **Min. permitted ambient temp. for motor (transport/storage)** | - 40 °C |
| **Installation position** | Any |
| **Condensation drainage holes** | None, open rotor |
| **Mode** | S1 |
| **Motor bearing** | Ball bearing |
| **Technical features** | - Output 10 VDC, max. 1.1 mA<br>- Locked-rotor detection<br>- Tach output<br>- Speed control<br>- Power limiter<br>- Motor current limitation<br>- Soft start<br>- Control input 0-10 VDC / PWM<br>- Control interface with SELV potential safely disconnected from the mains<br>- Overvoltage detection<br>- Thermal overload protection for electronics/motor<br>- Line undervoltage detection |
| **EMC immunity to interference** | According to EN 61000-6-2 (industrial environment) |
| **EMC circuit feedback** | According to EN 61000-3-2/3 |
| **EMC interference emission** | According to EN 61000-6-3 (household environment) |
| **Touch current according to IEC 60990 (measuring circuit Fig. 4, TN system)** | <= 3.5 mA |
| **Motor protection** | Electronic motor protection |
| **With cable** | Variable |
| **Protection class assignment** | I; If a protective earth is connected.<br>The built-in component has several local protection class assignments.<br>The final protection class is determined by the intended installation. |
| **Conformity with standards** | EN 60335-1; EN 60034-1; EN 60204-1; CE; UKCA |
| **Comment on CE** | Ecodesign Directive 2009/125/EC + Fan Directive (EC) No. 327/2011 does not apply, as power consumption <125W. |
| **Approval** | UL 1004-7 + 60730-1; CSA C22.2 No. 77 + CAN/CSA-E60730-1 |



ebm-papst Mulfingen GmbH & Co. KG · Bachmühle 2 · D-74673 Mulfingen · Phone +49 (0) 7938 81-0 · Fax +49 (0) 7938 81-110 · info1@de.fansco.com · www.fansco.com

# EC centrifugal module - RadiCal

backward-curved, single-intake
with housing

## Product drawing

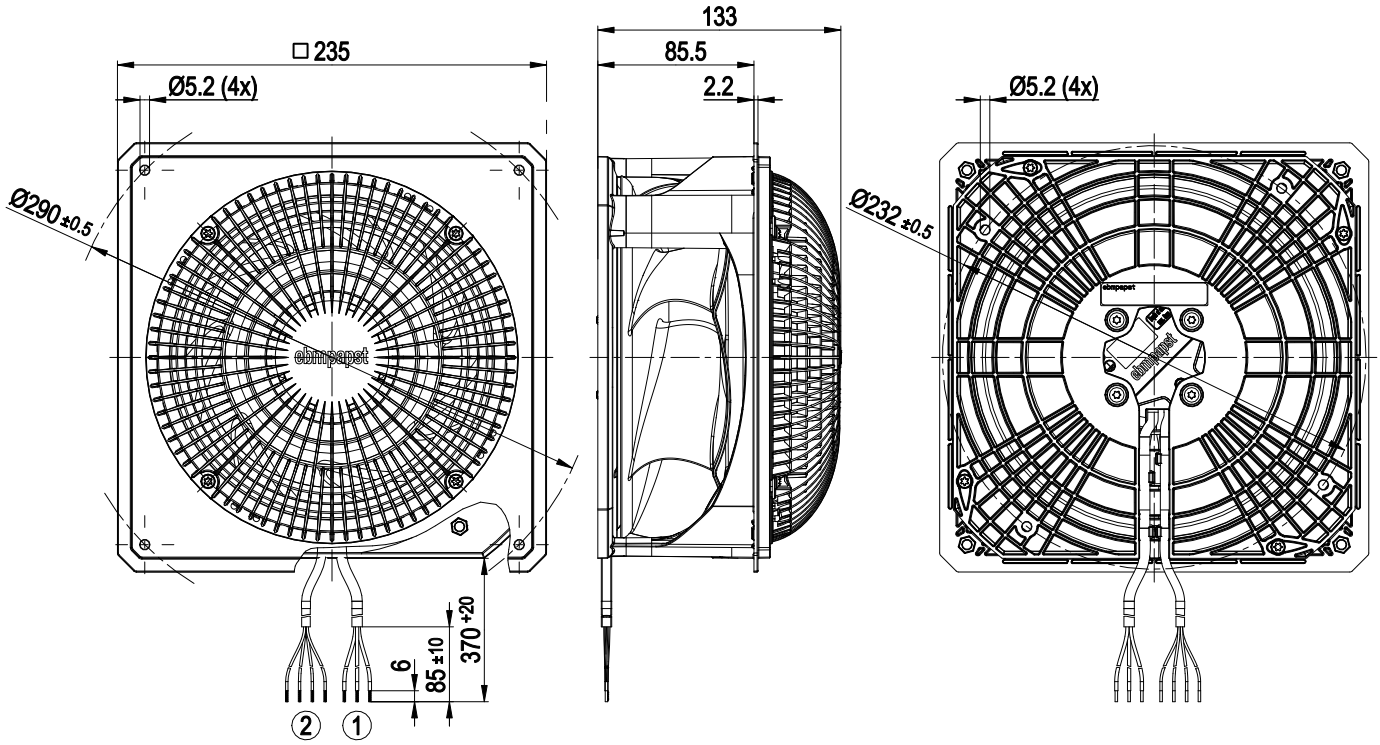


| | |
|---|---|
| 1 | Supply line (PWR) PVC AWG20 |
| | 3x splice |
| 2 | Control wire (CTRL) PVC AWG22 |
| | 4x splice |



ebm-papst Mulfingen GmbH & Co. KG · Bachmühle 2 · D-74673 Mulfingen · Phone +49 (0) 7938 81-0 · Fax +49 (0) 7938 81-110 · info1@de.fansco.com · www.fansco.com

## Mounting dimensions

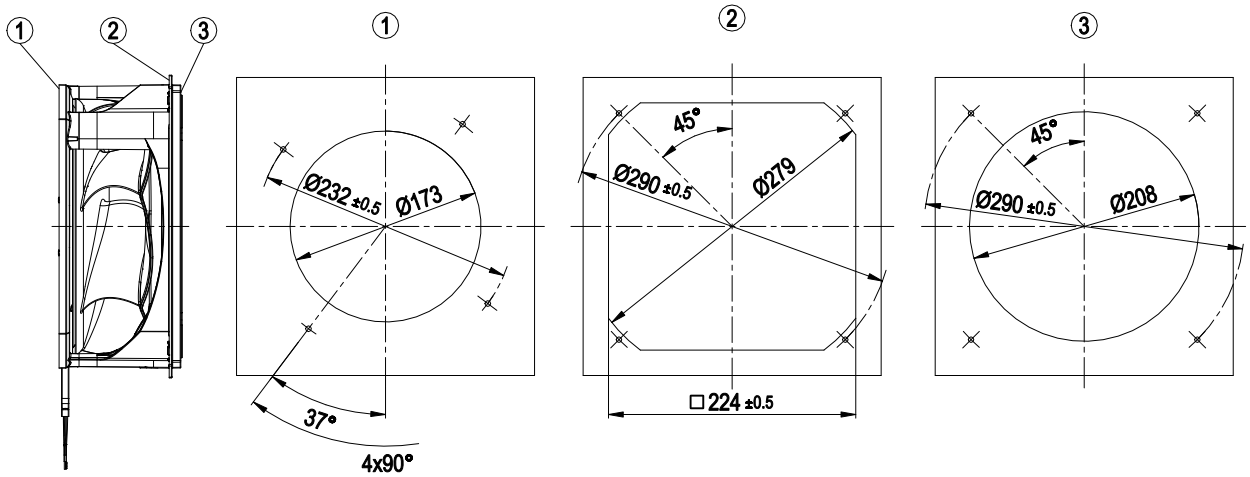


| | |
|---|---|
| 1 | Installation of motor plate |
| 2 | Installation of nozzle plate on outlet side |
| 3 | Installation of nozzle plate on intake side |

## Connection diagram

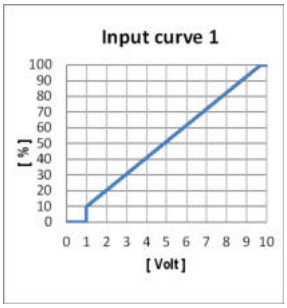


| No. | Conn. | Designation | Color | Function/assignment |
|---|---|---|---|---|
| | PWR | L | black | Power supply, phase, see nameplate for voltage range |
| | PWR | N | blue | Power supply, neutral conductor, see nameplate for voltage range |
| | PWR | PE | green/yellow | Protective earth |
| | | | | |
| | CTRL | GND | blue | Reference ground for control interface, SELV |
| | CTRL | IO1 | yellow | Factory setting:<br>Analog input 0-10 V/PWM, Ri=100 KΩ, fPWM=1 kHz..10 kHz,<br>Function: Speed set value<br>Characteristic curve parameterizable (see "Input curve 1"), SELV<br>Function parameterizable at the factory (see Optional interface functions table) |
| | CTRL | IO2 | white | Factory setting:<br>Open collector output, Umax=50 VDC, Imax= 10 mA, function: Tach output<br>1 pulse/revolution, SELV<br>Function parameterizable at factory (see table Optional interface functions) |
| | CTRL | Vout | red | Voltage output 10 VDC +/-3%, Imax=1.1 mA<br>Not short-circuit-proof, power supply for external devices, SELV |



ebm-papst Mulfingen GmbH & Co. KG · Bachmühle 2 · D-74673 Mulfingen · Phone +49 (0) 7938 81-0 · Fax +49 (0) 7938 81-110 · info1@de.fansco.com · www.fansco.com

## Terminal/plug assignment

### Basic (B4)
**Factory configuration option upon request**

○ *Factory configuration option*

| | configurable IO mode | electrical specification | INPUT | | | | OUTPUT | | | | |
|---|---|---|---|---|---|---|---|---|---|---|---|
| | | | source: set value | switch: parameter set: #1 / #2 | switch: direction of rotation: cw / ccw | switch: enable/disable input | configurable function | signal: tach out | signal: diagnostics out | signal: alarm out | signal: run monitoring | signal: status | signal: configurable function |
| IO1 | ○ **Din1 (high active)**: digital input | active: parameterizable voltage x-30 VDC<br>not active: pin open or parameterizable voltage <x VDC, SELV | | ○ | ○ | ○ | ○ | | | | | | |
| | ○ **Ain1 0-10 V/PWM:** analog input | Ri = 100 kΩ, characteristic curve parameterizable, $f_{PWM}$ = 1k..10 kHz, SELV | ○ | | | | ○ | | | | | | |
| IO2 | ○ **Tach out** (open collector) | Umax=50 VDC, Imax=10 mA, SELV | | | | | | ○ | | | | | |
| | ○ **Diagnostics out** (open collector) | Umax=50 VDC, Imax=10 mA, SELV | | | | | | | ○ | | | | |
| | ○ **Alarm out** (open collector) | Umax=50 VDC, Imax=10 mA, SELV | | | | | | | | ○ | | | |
| | ○ **Open collector** | Umax=50 VDC, Imax=10 mA, SELV | | | | | | | | | ○ | ○ | ○ |
| Vout | Voltage output | Voltage10 VDC, SELV | | | | | | | | | | | |



ebm-papst Mulfingen GmbH & Co. KG · Bachmühle 2 · D-74673 Mulfingen · Phone +49 (0) 7938 81-0 · Fax +49 (0) 7938 81-110 · info1@de.fansco.com · www.fansco.com

**8300101419**

VBH0206SSLDS

# EC centrifugal module - RadiCal

backward-curved, single-intake

with housing

## Curves: Air performance 50 Hz

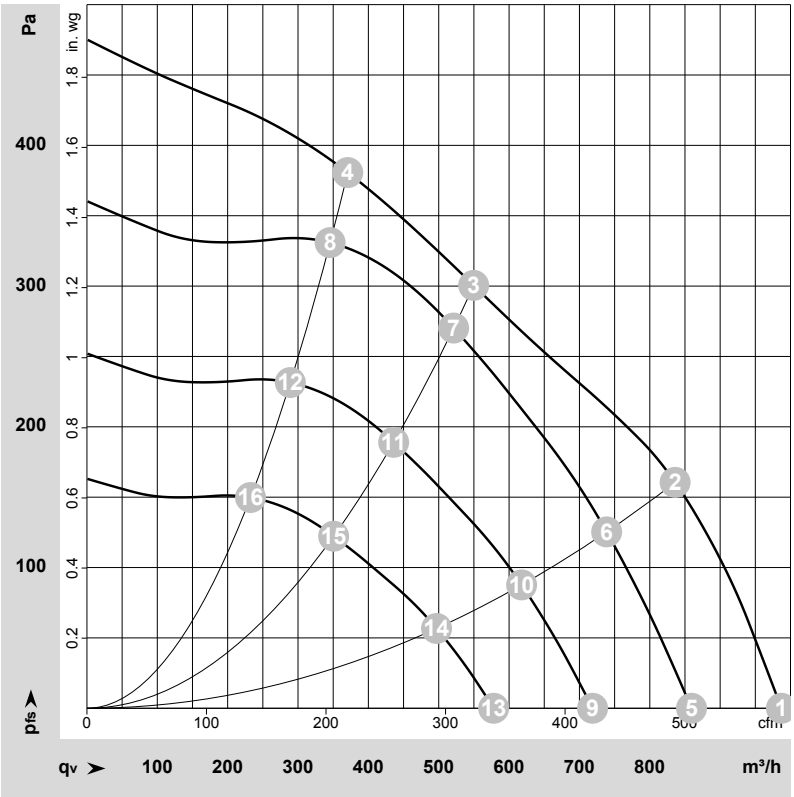


ρ = 1.15 kg/m³ ± 2 %

Measurement: LU-228006-1
Date: 2023-07-27
Nozzle: 8217118633

Air performance measured according to ISO 5801 installation category A. For detailed information on the measurement setup, contact ebm-papst. Intake sound level: Sound power level according to ISO 13347 / sound pressure level measured at 1 m distance from fan axis. The values given are valid under the specified measuring conditions and may vary due to conditions of installation. For deviations from the standard configuration, the parameters have to be checked on the installed unit.

## Measured values

| | Wired | U | f | n | $P_e$ | I | $LpA_{in}$ | $LwA_{in}$ | $q_V$ | $p_{fs}$ | $q_V$ | $p_{fs}$ |
|---|---|---|---|---|---|---|---|---|---|---|---|---|
| | | V | Hz | $min^{-1}$ | W | A | dB(A) | dB(A) | $m^3/h$ | Pa | cfm | in. wg |
| 1 | 1~ | 230 | 50 | 3160 | 66 | 0.56 | 64 | 72 | 985 | 0 | 580 | 0.00 |
| 2 | 1~ | 230 | 50 | 3115 | 85 | 0.70 | 61 | 69 | 835 | 160 | 490 | 0.64 |
| 3 | 1~ | 230 | 50 | 2900 | 85 | 0.70 | 59 | 67 | 550 | 300 | 325 | 1.20 |
| 4 | 1~ | 230 | 50 | 2950 | 85 | 0.70 | 62 | 70 | 370 | 380 | 220 | 1.53 |
| 5 | 1~ | 230 | 50 | 2750 | 44 | 0.37 | 60 | 68 | 860 | 0 | 505 | 0.00 |
| 6 | 1~ | 230 | 50 | 2750 | 59 | 0.48 | 58 | 66 | 740 | 126 | 435 | 0.51 |
| 7 | 1~ | 230 | 50 | 2750 | 73 | 0.60 | 57 | 65 | 520 | 270 | 305 | 1.08 |
| 8 | 1~ | 230 | 50 | 2750 | 69 | 0.57 | 60 | 69 | 345 | 331 | 205 | 1.33 |
| 9 | 1~ | 230 | 50 | 2300 | 26 | 0.21 | 56 | 64 | 720 | 0 | 425 | 0.00 |
| 10 | 1~ | 230 | 50 | 2300 | 34 | 0.28 | 53 | 62 | 620 | 88 | 365 | 0.35 |
| 11 | 1~ | 230 | 50 | 2300 | 43 | 0.35 | 53 | 61 | 435 | 189 | 255 | 0.76 |
| 12 | 1~ | 230 | 50 | 2300 | 41 | 0.33 | 56 | 64 | 290 | 232 | 170 | 0.93 |
| 13 | 1~ | 230 | 50 | 1850 | 13 | 0.11 | 50 | 59 | 580 | 0 | 340 | 0.00 |
| 14 | 1~ | 230 | 50 | 1850 | 18 | 0.15 | 48 | 56 | 495 | 57 | 295 | 0.23 |
| 15 | 1~ | 230 | 50 | 1850 | 22 | 0.18 | 47 | 55 | 350 | 122 | 205 | 0.49 |
| 16 | 1~ | 230 | 50 | 1850 | 21 | 0.17 | 50 | 59 | 235 | 150 | 135 | 0.60 |

Wired = Wiring · U = Voltage · f = Frequency · n = Speed (rpm) · $P_e$ = Power consumption · I = Current draw · $LpA_{in}$ = Sound pressure level intake side · $LwA_{in}$ = Sound power level intake side
$q_V$ = Air flow · $p_{fs}$ = Pressure increase



ebm-papst Mulfingen GmbH & Co. KG · Bachmühle 2 · D-74673 Mulfingen · Phone +49 (0) 7938 81-0 · Fax +49 (0) 7938 81-110 · info1@de.fansco.com · www.fansco.com