8300101416

VBH0206SSLDS

EC centrifugal module - RadiCal

backward-curved, single-intake

with housing

ebm-papst Mulfingen GmbH & Co. KG
Bachmühle 2 · D-74673 Mulfingen
Phone +49 7938 81-0
Fax +49 7938 81-110
info1@de.fansco.com
www.fansco.com

Limited partnership · Headquarters Mulfingen
Amtsgericht (court of registration) Stuttgart · HRA 590344

General partner Elektrobau Mulfingen GmbH · Headquarters Mulfingen
Amtsgericht (court of registration) Stuttgart · HRB 590142

Nominal data

Item	**8300101416**
Motor	**E06001-17**

Phase		1~
Nominal voltage	VAC	230
Nominal voltage range	VAC	200 .. 240
Frequency	Hz	50/60

Method of obtaining data		ml
Speed (rpm)	min^{-1}	2900
Power consumption	W	85
Current draw	A	0.7
Min. ambient temperature	°C	-25
Max. ambient temperature	°C	60

ml = Max. load · me = Max. efficiency · fa = Free air · cs = Customer specification · ce = Customer equipment
Subject to change

EC centrifugal module - RadiCal

backward-curved, single-intake
with housing

Technical description

Size	206 mm
Motor size	60
Rotor surface	Thick-film passivated
Electronics housing material	Die-cast aluminum
Impeller material	PP plastic
Housing material	PP plastic
Number of blades	7
Direction of rotation	Clockwise, viewed toward rotor
Degree of protection	IP54
Insulation class	"B"
Moisture (F) / Environmental (H) protection class	H1
Max. permitted ambient temp. for motor (transport/storage)	+ 80 °C
Min. permitted ambient temp. for motor (transport/storage)	- 40 °C
Installation position	Any
Condensation drainage holes	None, open rotor
Mode	S1
Motor bearing	Ball bearing
Technical features	- Output 10 VDC, max. 1.1 mA - Locked-rotor detection - Tach output - Speed control - Power limiter - Motor current limitation - Soft start - Control input 0-10 VDC / PWM - Control interface with SELV potential safely disconnected from the mains - Overvoltage detection - Thermal overload protection for electronics/motor - Line undervoltage detection
EMC immunity to interference	According to EN 61000-6-2 (industrial environment)
EMC circuit feedback	According to EN 61000-3-2/3
EMC interference emission	According to EN 61000-6-3 (household environment)
Touch current according to IEC 60990 (measuring circuit Fig. 4, TN system)	<= 3.5 mA
Motor protection	Electronic motor protection
With cable	Variable
Protection class assignment	I; If a protective earth is connected. The built-in component has several local protection class assignments. The final protection class is determined by the intended installation.
Conformity with standards	EN 60335-1; EN 60034-1; EN 60204-1; CE; UKCA
Comment on CE	Ecodesign Directive 2009/125/EC + Fan Directive (EC) No. 327/2011 does not apply, as power consumption <125W.
Approval	UL 1004-7 + 60730-1; CSA C22.2 No. 77 + CAN/CSA-E60730-1

ebm-papst Mulfingen GmbH & Co. KG · Bachmühle 2 · D-74673 Mulfingen · Phone +49 (0) 7938 81-0 · Fax +49 (0) 7938 81-110 · info1@de.fansco.com · www.fansco.com

EC centrifugal module - RadiCal

backward-curved, single-intake
with housing

Product drawing

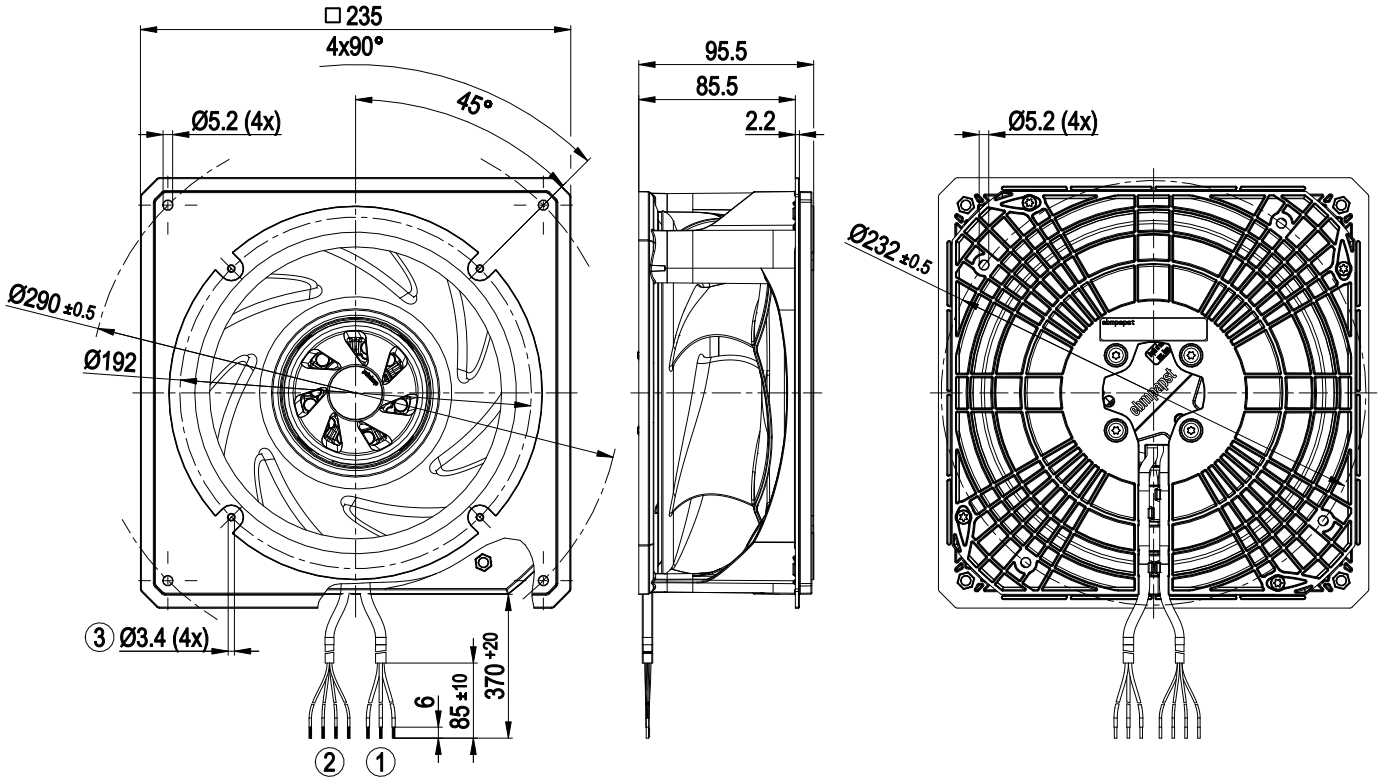

1	Supply line (PWR) PVC AWG20
	3x splice
2	Control wire (CTRL) PVC AWG22
	4x splice
3	Fastening holes for FlowGrid 8217118542 (not included in scope of delivery) are provided and must only be used for FlowGrid

ebm-papst Mulfingen GmbH & Co. KG · Bachmühle 2 · D-74673 Mulfingen · Phone +49 (0) 7938 81-0 · Fax +49 (0) 7938 81-110 · info1@de.fansco.com · www.fansco.com

Mounting dimensions

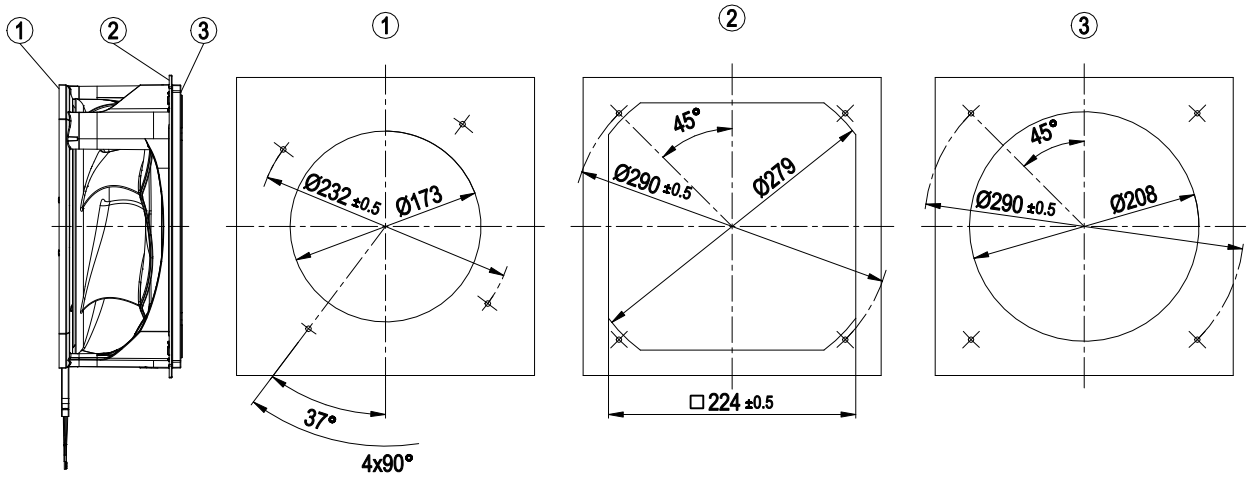

1	Installation of motor plate
2	Installation of nozzle plate on outlet side
3	Installation of nozzle plate on intake side

Connection diagram

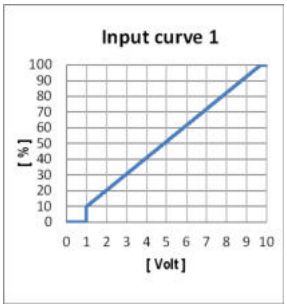

No.	Conn.	Designation	Color	Function/assignment
	PWR	L	black	Power supply, phase, see nameplate for voltage range
	PWR	N	blue	Power supply, neutral conductor, see nameplate for voltage range
	PWR	PE	green/yellow	Protective earth
	CTRL	GND	blue	Reference ground for control interface, SELV
	CTRL	IO1	yellow	Factory setting: Analog input 0-10 V/PWM, Ri=100 KΩ, fPWM=1 kHz..10 kHz, Function: Speed set value Characteristic curve parameterizable (see "Input curve 1"), SELV Function parameterizable at the factory (see Optional interface functions table)
	CTRL	IO2	white	Factory setting: Open collector output, Umax=50 VDC, Imax= 10 mA, function: Tach output 1 pulse/revolution, SELV Function parameterizable at factory (see table Optional interface functions)
	CTRL	Vout	red	Voltage output 10 VDC +/-3%, Imax=1.1 mA Not short-circuit-proof, power supply for external devices, SELV

ebm-papst Mulfingen GmbH & Co. KG · Bachmühle 2 · D-74673 Mulfingen · Phone +49 (0) 7938 81-0 · Fax +49 (0) 7938 81-110 · info1@de.fansco.com · www.fansco.com

Terminal/plug assignment

Basic (B4)
Factory configuration option upon request

○ *Factory configuration option*

	configurable IO mode	electrical specification	INPUT				OUTPUT				
			source: set value	switch: parameter set: #1 / #2	switch: direction of rotation: cw / ccw	switch: enable/disable input	configurable function	signal: tach out	signal: diagnostics out	signal: alarm out	signal: run monitoring	signal: status	signal: configurable function
IO1	○ **Din1 (high active)**: digital input	active: parameterizable voltage x-30 VDC not active: pin open or parameterizable voltage <x VDC, SELV		○	○	○	○						
	○ **Ain1 0-10 V/PWM:** analog input	Ri = 100 kΩ, characteristic curve parameterizable, f_{PWM} = 1k..10 kHz, SELV	○										
IO2	○ **Tach out** (open collector)	Umax=50 VDC, Imax=10 mA, SELV						○					
	○ **Diagnostics out** (open collector)	Umax=50 VDC, Imax=10 mA, SELV							○				
	○ **Alarm out** (open collector)	Umax=50 VDC, Imax=10 mA, SELV								○			
	○ **Open collector**	Umax=50 VDC, Imax=10 mA, SELV										○	○
Vout	Voltage output	Voltage10 VDC, SELV											

ebm-papst Mulfingen GmbH & Co. KG · Bachmühle 2 · D-74673 Mulfingen · Phone +49 (0) 7938 81-0 · Fax +49 (0) 7938 81-110 · info1@de.fansco.com · www.fansco.com

8300101416

VBH0206SSLDS

EC centrifugal module - RadiCal

backward-curved, single-intake

with housing

Curves: Air performance 50 Hz

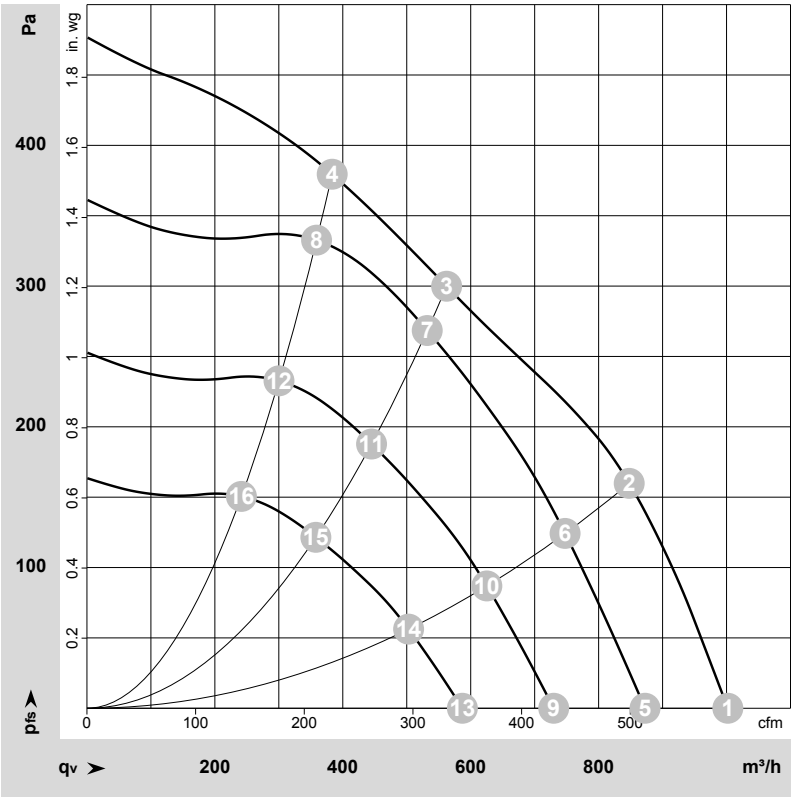

ρ = 1.15 kg/m³ ± 2 %

Measurement: LU-226177-1
Date: 2023-07-27
Nozzle: 8217118633

Air performance measured according to ISO 5801 installation category A. For detailed information on the measurement setup, contact ebm-papst. Intake sound level: Sound power level according to ISO 13347 / sound pressure level measured at 1 m distance from fan axis. The values given are valid under the specified measuring conditions and may vary due to conditions of installation. For deviations from the standard configuration, the parameters have to be checked on the installed unit.

Measured values

	Wired	U	f	n	P_e	I	LpA_{in}	LwA_{in}	q_V	p_{fs}	q_V	p_{fs}
		V	Hz	min^{-1}	W	A	dB(A)	dB(A)	m^3/h	Pa	cfm	in. wg
1	1~	230	50	3160	65	0.54	65	73	1000	0	590	0.00
2	1~	230	50	3120	85	0.70	62	70	850	160	500	0.64
3	1~	230	50	2900	85	0.70	59	67	560	300	330	1.20
4	1~	230	50	2935	85	0.70	61	70	385	380	225	1.53
5	1~	230	50	2750	43	0.36	62	69	875	0	515	0.00
6	1~	230	50	2750	58	0.47	59	67	750	125	440	0.50
7	1~	230	50	2750	72	0.59	58	65	530	268	315	1.08
8	1~	230	50	2750	70	0.57	60	68	360	333	210	1.34
9	1~	230	50	2300	25	0.21	57	65	730	0	430	0.00
10	1~	230	50	2300	34	0.28	54	62	625	87	370	0.35
11	1~	230	50	2300	42	0.34	53	61	445	188	260	0.75
12	1~	230	50	2300	41	0.33	55	64	300	233	175	0.94
13	1~	230	50	1850	13	0.11	52	59	585	0	345	0.00
14	1~	230	50	1850	18	0.14	49	57	505	56	295	0.22
15	1~	230	50	1850	22	0.18	48	55	360	121	210	0.49
16	1~	230	50	1850	21	0.17	50	58	240	151	140	0.61

Wired = Wiring · U = Voltage · f = Frequency · n = Speed (rpm) · P_e = Power consumption · I = Current draw · LpA_{in} = Sound pressure level intake side · LwA_{in} = Sound power level intake side
q_V = Air flow · p_{fs} = Pressure increase

ebm-papst Mulfingen GmbH & Co. KG · Bachmühle 2 · D-74673 Mulfingen · Phone +49 (0) 7938 81-0 · Fax +49 (0) 7938 81-110 · info1@de.fansco.com · www.fansco.com