8300100792

VMA0400CSPFS

EC axial panel fan - AxiEco

with guard grille

ebm-papst Mulfingen GmbH & Co. KG
Bachmühle 2 · D-74673 Mulfingen
Phone +49 7938 81-0
Fax +49 7938 81-110
info1@de.fansco.com
www.fansco.com

Limited partnership · Headquarters Mulfingen
Amtsgericht (court of registration) Stuttgart · HRA 590344

General partner Elektrobau Mulfingen GmbH · Headquarters Mulfingen
Amtsgericht (court of registration) Stuttgart · HRB 590142

Nominal data

Item	**8300100792**
Motor	**E09001-28**

Phase		1~
Nominal voltage	VAC	230
Nominal voltage range	VAC	200 .. 240
Frequency	Hz	50/60
Method of obtaining data		ml
Status		prelim.
Speed (rpm)	min^{-1}	1660
Power consumption	W	390
Current draw	A	2.4
Max. back pressure	Pa	250
Max. back pressure	in. wg	1
Min. ambient temperature	°C	-25
Max. ambient temperature	°C	60

ml = Max. load · me = Max. efficiency · fa = Free air · cs = Customer specification · ce = Customer equipment
Subject to change

Data according to Commission Regulation (EU) 327/2011 (prEN 17166)

		Actual	Req. 2015
01 Overall efficiency η_{es}	%	46.5	30.9
02 Measurement category		A	
03 Efficiency category		Static	
04 Efficiency grade N		55.6	40
05 Variable speed drive		Yes	

09 Power consumption P_{ed}	kW	0.36
09 Air flow q_v	m³/h	3360
09 Pressure increase p_{fs}	Pa	164
10 Speed (rpm) n	min^{-1}	1665
11 Specific ratio*		1.00

Data obtained at optimum efficiency level.

* Specific ratio = 1 + p_{fs} / 100 000 Pa

LU-223625

The efficiency values displayed for achieving conformity with the Ecodesign Regulation EU 327/2011 has been reached with defined air duct components (e.g. inlet rings).
The dimensions must be requested from ebm-papst. If other air conduction geometries are used on the installation side, the ebm-papst evaluation loses its validity/the conformity must be confirmed again.

The product does not fall within the scope of Regulation (EU) 2019/1781 due to the exception specified in Article 2 (2a) (motors completely integrated into a product).

EC axial panel fan - AxiEco

with guard grille

Technical description

Size	400 mm
Motor size	90
Rotor surface	Painted black
Terminal box material	PA plastic
Electronics housing material	Die-cast aluminum, painted gray
Impeller material	PP plastic
Guard grille material	Steel, coated with black plastic (RAL 9005)
Number of blades	5
Airflow direction	V
Direction of rotation	Clockwise, viewed toward rotor
Degree of protection	IP55
Insulation class	"F"
Moisture (F) / Environmental (H) protection class	H2
Max. permitted ambient temp. for motor (transport/storage)	+80 °C
Min. permitted ambient temp. for motor (transport/storage)	-40 °C
Installation position	Shaft horizontal or rotor on bottom; rotor on top on request
Condensation drainage holes	On rotor side
Mode	S1
Motor bearing	Ball bearing
Technical features	- Locked-rotor detection - Speed control - Alarm relay - Power limiter - Motor current limitation - PFC, passive - Soft start - Control interface with SELV potential safely disconnected from the mains - Temperature derating - Thermal overload protection for electronics/motor - Line undervoltage / phase failure detection
Touch current according to IEC 60990 (measuring circuit Fig. 4, TN system)	<= 3.5 mA
Electrical hookup	Terminal box
Motor protection	Electronic motor protection
Protection class assignment	I; If a protective earth is connected. The built-in component has several local protection class assignments. The final protection class is determined by the intended installation.
Conformity with standards	EN 60335-1; EN 61800-5-1; UKCA; CE
Approval	UL 1004-7 + 60730-1; CSA C22.2 No. 77 + CAN/CSA-E60730-1

ebm-papst Mulfingen GmbH & Co. KG · Bachmühle 2 · D-74673 Mulfingen · Phone +49 (0) 7938 81-0 · Fax +49 (0) 7938 81-110 ·sales@fansco.com · www.fansco.com

EC axial panel fan - AxiEco

with guard grille

Product drawing

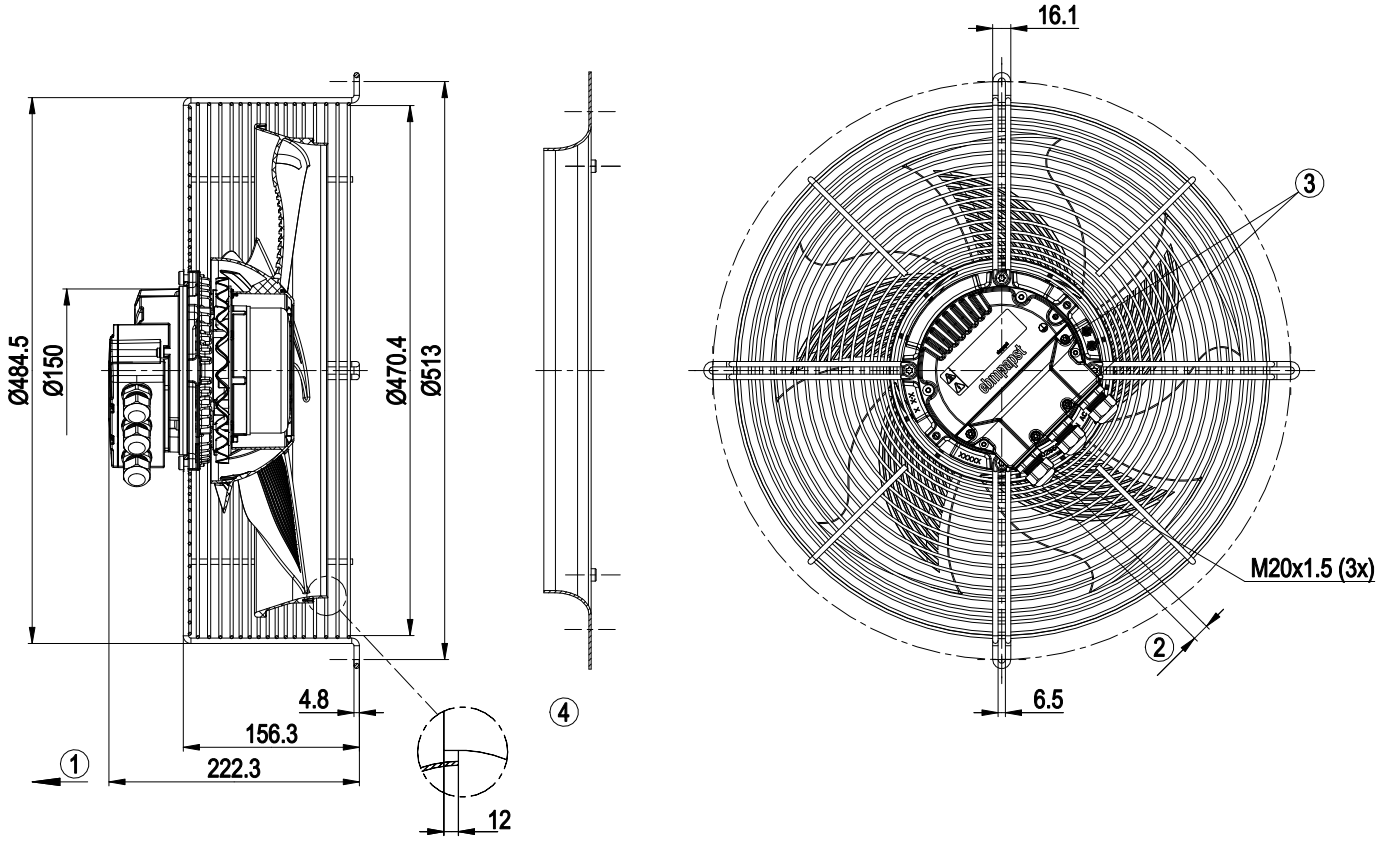

1	Airflow direction "V"
2	Cable diameter min. 4 mm, max. 10 mm, tightening torque 4 ± 0.6 Nm
	(The tightening torque is designed for PVC cables. If the cable materials are different, the tightening torque may have to be adjusted)
3	Tightening torque 2.6±0.4 Nm
4	Accessory part: Inlet ring 40100-2-4013 not included in scope of delivery

ebm-papst Mulfingen GmbH & Co. KG · Bachmühle 2 · D-74673 Mulfingen · Phone +49 (0) 7938 81-0 · Fax +49 (0) 7938 81-110 ·sales@fansco.com · www.fansco.com

EC axial panel fan - AxiEco

with guard grille

Accessory part

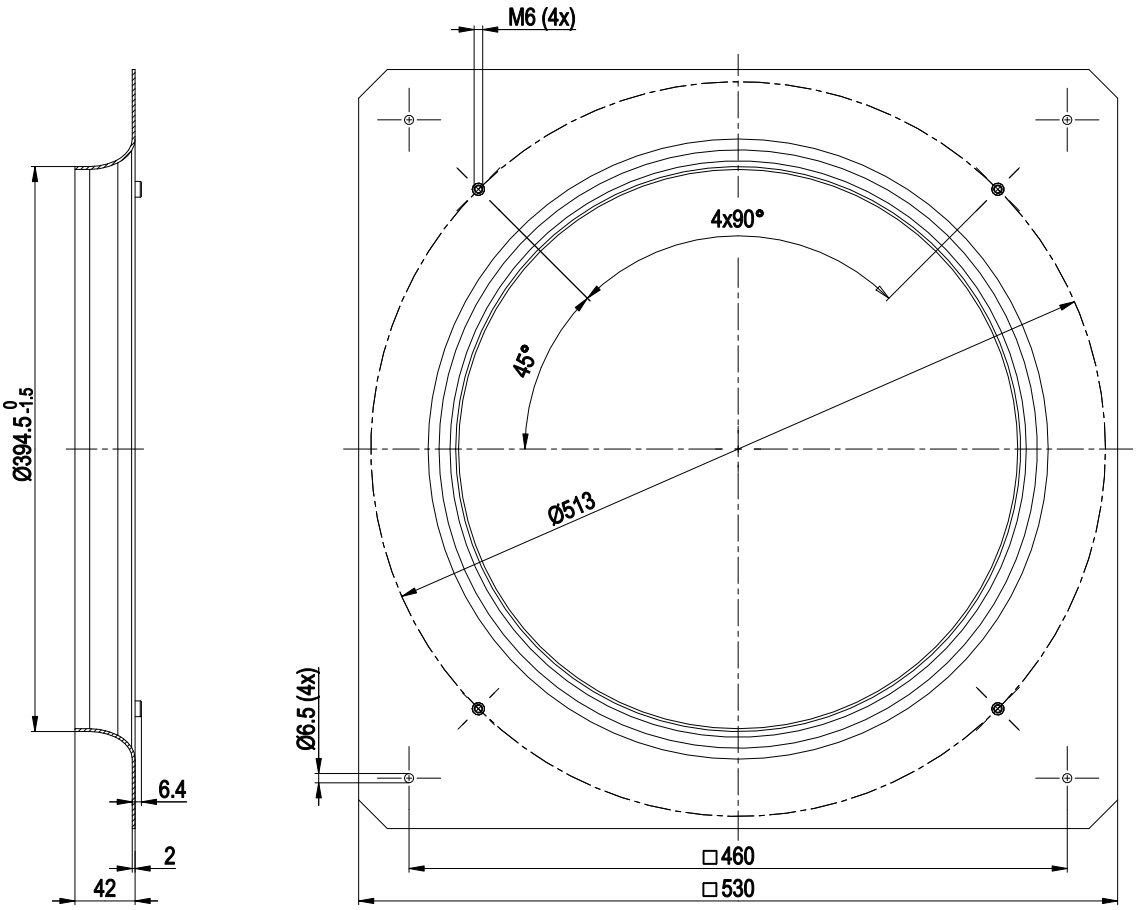

	Inlet ring 40100-2-4013

ebm-papst Mulfingen GmbH & Co. KG · Bachmühle 2 · D-74673 Mulfingen · Phone +49 (0) 7938 81-0 · Fax +49 (0) 7938 81-110 ·sales@fansco.com · www.fansco.com

EC axial panel fan - AxiEco

with guard grille

Connection diagram

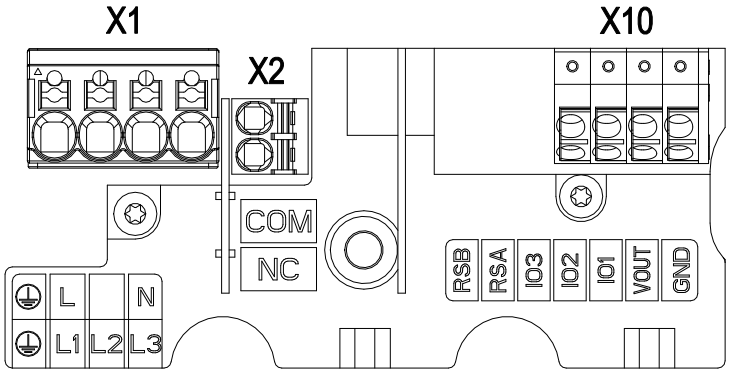

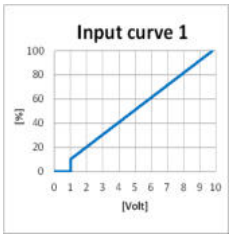

No.	Conn.	Designation	Function/assignment
X1	PWR	PE	Protective earth
X1	PWR	L	Power supply, phase, see nameplate for voltage range
X1	PWR	N	Power supply, neutral conductor, see nameplate for voltage range
X2	CTRL	COM	Status relay, floating status contact, common connection, contact rating 250 VAC / 2 A (AC1) / min. 10 mA, reinforced insulation on supply side and on control interface side
X2	CTRL	NC	Status relay, floating status contact, break for failure
X10	CTRL	GND	Reference ground for control interface, SELV
X10	CTRL	Vout	Voltage output 10 VDC +/-3%, Imax=10 mA Short-circuit-proof, power supply for external devices, SELV
X10	CTRL	IO1	Factory setting: Analog input 0-10 V / PWM, Ri=100 kΩ, function: set value Characteristic curve parameterizable (see input characteristic curve "Input curve 1"), SELV Function parameterizable at the factory (see table Optional interface functions)
X10	CTRL	IO2	Factory setting: Open collector output, Umax=50 VDC, Imax=20 mA, function:Tacho output 1 pulse/revolution, SELV Function parameterizable at factory (see table Optional interface functions)

ebm-papst Mulfingen GmbH & Co. KG · Bachmühle 2 · D-74673 Mulfingen · Phone +49 (0) 7938 81-0 · Fax +49 (0) 7938 81-110 ·sales@fansco.com · www.fansco.com

Terminal/plug assignment

Basic (B5)

Factory configuration option upon request

○ *factory configuration option*

	configurable IO mode	electrical specification	INPUT					OUTPUT				
			source: set value	switch: parameter set: #1 / #2	switch: direction of rotation: cw / ccw	switch: enable/disable input	configurable function	signal: tach out	signal: diagnostics out	signal: alarm out	signal: run monitoring	signal: status	signal: configurable function
IO1	○ Din1 (high active): digital input	active: parametrizable voltage x - 30 VDC not active: pin open or parametrizable voltage < x VDC, SELV		○	○	○	○						
	○ **Ain1 0-10 V/PWM:** analog input	Ri = 100 kΩ, characteristic curve parameterizable, f_{PWM} = 1 k - 10 kHz, SELV	○										
IO2	○ **Tach out** (open collector)	Umax = 50 VDC, Imax = 20 mA, SELV						○					
	○ **Diagnostics out** (open collector)	Umax = 50 VDC, Imax = 20 mA, SELV							○				
	○ **Alarm out** (open collector)	Umax = 50 VDC, Imax = 20 mA, SELV								○			
	○ **Open collector**	Umax = 50 VDC, Imax = 20 mA, SELV											○
COM NC	**Relais**	250 VAC / 2 A (AC1)									○	○	○
Vout	**Voltage output**	Voltage 10 VDC, SELV											

ebm-papst Mulfingen GmbH & Co. KG · Bachmühle 2 · D-74673 Mulfingen · Phone +49 (0) 7938 81-0 · Fax +49 (0) 7938 81-110 ·sales@fansco.com · www.fansco.com

8300100792

VMA0400CSPFS

EC axial panel fan - AxiEco

with guard grille

Curves: Air performance 50 Hz

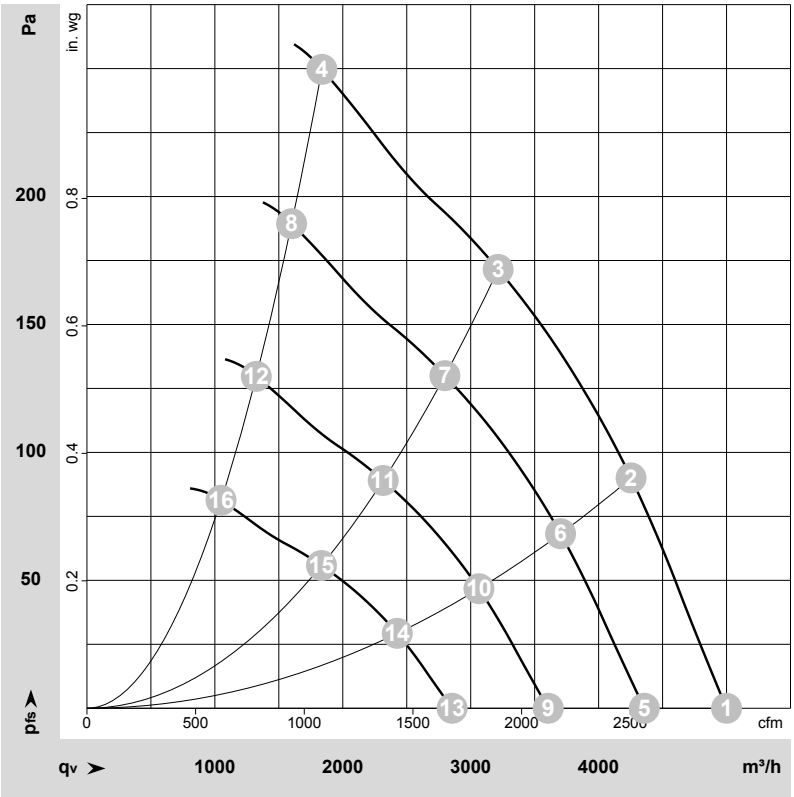

ρ = 1.15 kg/m³ ± 2 %

Measurement: LU-223625-1
Date: 2022-11-15
Nozzle: 40100-2-4013

Air performance measured according to ISO 5801 installation category A. For detailed information on the measurement setup, contact ebm-papst. Intake sound level: Sound power level according to ISO 13347 / sound pressure level measured at 1 m distance from fan axis. The values given are valid under the specified measuring conditions and may vary due to conditions of installation. For deviations from the standard configuration, the parameters have to be checked on the installed unit.

Measured values

	Wired	U	f	n	P_e	I	LpA_{in}	LwA_{in}	LwA_{out}	LwA	q_V	p_{fs}	q_V	p_{fs}
		V	Hz	min^{-1}	W	A	dB(A)	dB(A)	dB(A)	dB	m^3/h	Pa	cfm	in. wg
1	1~	230	50	1660	268	1.70	66	73	77	78	5000	0	2945	0.00
2	1~	230	50	1660	328	2.05	64	71	75	76	4255	90	2505	0.36
3	1~	230	50	1660	368	2.28	62	70	75	76	3215	170	1890	0.68
4	1~	230	50	1660	390	2.40	68	75	80	81	1835	250	1080	1.00
5	1~	230	50	1450	177	1.13	62	69	73	75	4355	0	2565	0.00
6	1~	230	50	1450	216	1.36	60	67	71	73	3705	68	2180	0.27
7	1~	230	50	1450	243	1.51	59	66	71	72	2800	130	1645	0.52
8	1~	230	50	1450	258	1.60	64	72	76	78	1600	189	940	0.76
9	1~	230	50	1200	100	0.64	58	65	68	70	3605	0	2120	0.00
10	1~	230	50	1200	123	0.77	55	63	66	68	3065	47	1805	0.19
11	1~	230	50	1200	138	0.85	54	62	66	68	2315	89	1365	0.36
12	1~	230	50	1200	146	0.90	60	67	71	73	1325	130	780	0.52
13	1~	230	50	950	50	0.32	52	59	62	64	2855	0	1680	0.00
14	1~	230	50	950	61	0.38	49	57	60	62	2425	29	1430	0.12
15	1~	230	50	950	68	0.42	48	56	61	62	1835	56	1080	0.22
16	1~	230	50	950	73	0.45	54	61	66	67	1050	81	615	0.33

Wired = Wiring · U = Voltage · f = Frequency · n = Speed (rpm) · P_e = Power consumption · I = Current draw · LpA_{in} = Sound pressure level intake side · LwA_{in} = Sound power level intake side
LwA_{out} = Sound power level outlet side · q_V = Air flow · p_{fs} = Pressure increase

ebm-papst Mulfingen GmbH & Co. KG · Bachmühle 2 · D-74673 Mulfingen · Phone +49 (0) 7938 81-0 · Fax +49 (0) 7938 81-110 ·sales@fansco.com · www.fansco.com