**8300100733**

VWA0630BSPFS

# EC axial panel fan - AxiBlade

sickle-shaped blades (S series)

Fan housing with guard grille

**ebm-papst Mulfingen GmbH & Co. KGaA & Co. KG**
Bachmühle 2 · D-74673 Mulfingen
Phone +49 7938 81-0
info1@de.fansco.com
www.fansco.com

Limited partnership · Headquarters Mulfingen
Amtsgericht (court of registration) Stuttgart · HRA 590344

General partner Elektrobau Mulfingen GmbH · Headquarters Mulfingen
Amtsgericht (court of registration) Stuttgart · HRB 590142

## Nominal data

| | |
|---|---|
| **Item** | **8300100733** |
| **Motor** | **E09001-28** |

| | | |
|---|---|---|
| Phase | | 1~ |
| Nominal voltage | VAC | 230 |
| Nominal voltage range | VAC | 200 .. 240 |
| Frequency | Hz | 50/60 |
| Method of obtaining data | | ml |
| Status | | prelim. |
| Speed (rpm) | $min^{-1}$ | 650 |
| Power consumption | W | 210 |
| Current draw | A | 1.35 |
| Max. back pressure | Pa | 65 |
| Max. back pressure | in. wg | 0.26 |
| Min. ambient temperature | °C | -25 |
| Max. ambient temperature | °C | 60 |

ml = Max. load · me = Max. efficiency · fa = Free air · cs = Customer specification · ce = Customer equipment
Subject to change

## Data according to Commission Regulation (EU) 327/2011 (prEN 17166)

| | | Actual | Req. 2015 |
|---|---|---|---|
| 01 Overall efficiency $\eta_{es}$ | % | 45 | 29.1 |
| 02 Measurement category | | A | |
| 03 Efficiency category | | Static | |
| 04 Efficiency grade N | | 55.9 | 40 |
| 05 Variable speed drive | | Yes | |

| | | |
|---|---|---|
| 09 Power consumption $P_{ed}$ | kW | 0.19 |
| 09 Air flow $q_v$ | m³/h | 5310 |
| 09 Pressure increase $p_{fs}$ | Pa | 52 |
| 10 Speed (rpm) n | $min^{-1}$ | 650 |
| 11 Specific ratio* | | 1.00 |

Data obtained at optimum efficiency level.

* Specific ratio = 1 + $p_{fs}$ / 100 000 Pa

LU-229923

The efficiency values displayed for achieving conformity with the Ecodesign Regulation EU 327/2011 has been reached with defined air duct components (e.g. inlet rings).
The dimensions must be requested from ebm-papst. If other air conduction geometries are used on the installation side, the ebm-papst evaluation loses its validity/the conformity must be confirmed again.

The product does not fall within the scope of Regulation (EU) 2019/1781 due to the exception specified in Article 2 (2a) (motors completely integrated into a product).

# EC axial panel fan - AxiBlade

sickle-shaped blades (S series)
Fan housing with guard grille

## Technical description

| | |
|---|---|
| **Weight** | 19.5 kg |
| **Size** | 630 mm |
| **Motor size** | 90 |
| **Rotor surface** | Painted black |
| **Terminal box material** | PA plastic |
| **Electronics housing material** | Die-cast aluminum, painted gray |
| **Impeller material** | PP plastic |
| **Fan housing material** | Sheet steel, galvanized and coated with black plastic (RAL 9005) |
| **Guard grille material** | Steel, coated with black plastic (RAL 9005) |
| **Number of blades** | 5 |
| **Blade pitch** | 0° |
| **Airflow direction** | V |
| **Direction of rotation** | Clockwise, viewed toward rotor |
| **Degree of protection** | IP55 |
| **Insulation class** | "F" |
| **Moisture (F) / Environmental (H) protection class** | H2 |
| **Max. permitted ambient temp. for motor (transport/storage)** | +80 °C |
| **Min. permitted ambient temp. for motor (transport/storage)** | -40 °C |
| **Installation position** | Shaft horizontal or rotor on bottom; rotor on top on request |
| **Condensation drainage holes** | On rotor side |
| **Mode** | S1 |
| **Motor bearing** | Ball bearing; (sealed) |
| **Technical features** | - Locked-rotor detection<br>- Speed control<br>- Alarm relay<br>- Power limiter<br>- Motor current limitation<br>- PFC, passive<br>- Soft start<br>- Control interface with SELV potential safely disconnected from the mains<br>- Temperature derating<br>- Thermal overload protection for electronics/motor<br>- Line undervoltage / phase failure detection |
| **Power Factor Correction (PFC)** | Passive |
| **EMC immunity to interference** | According to EN 61000-6-2 (industrial environment) |
| **EMC circuit feedback** | According to EN 61000-3-2/3 |
| **EMC interference emission** | According to EN 61000-6-3 (household environment) |
| **Touch current according to IEC 60990 (measuring circuit Fig. 4, TN system)** | <= 3.5 mA |
| **Electrical hookup** | Terminal box |
| **Motor protection** | Electronic motor protection |
| **Protection class assignment** | I; If a protective earth is connected.<br>The built-in component has several local protection class assignments.<br>The final protection class is determined by the intended installation. |
| **Conformity with standards** | EN 60335-1; EN 61800-5-1; CE; UKCA |



ebm-papst Mulfingen GmbH & Co. KGaA & Co. KG · Bachmühle 2 · D-74673 Mulfingen · Phone +49 (0) 7938 81-0 ·sales@fansco.com · www.fansco.com

| | |
|---|---|
| **Approval** | CSA C22.2 No. 77 + CAN/CSA-E60730-1; UL 1004-7 + 60730-1 |



ebm-papst Mulfingen GmbH & Co. KGaA & Co. KG · Bachmühle 2 · D-74673 Mulfingen · Phone +49 (0) 7938 81-0 ·sales@fansco.com · www.fansco.com

# EC axial panel fan - AxiBlade

sickle-shaped blades (S series)

Fan housing with guard grille

## Product drawing

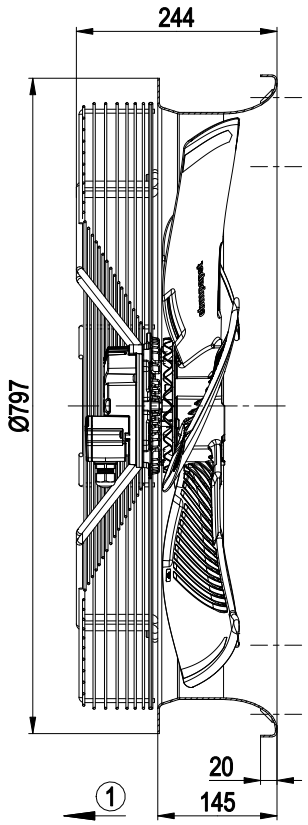


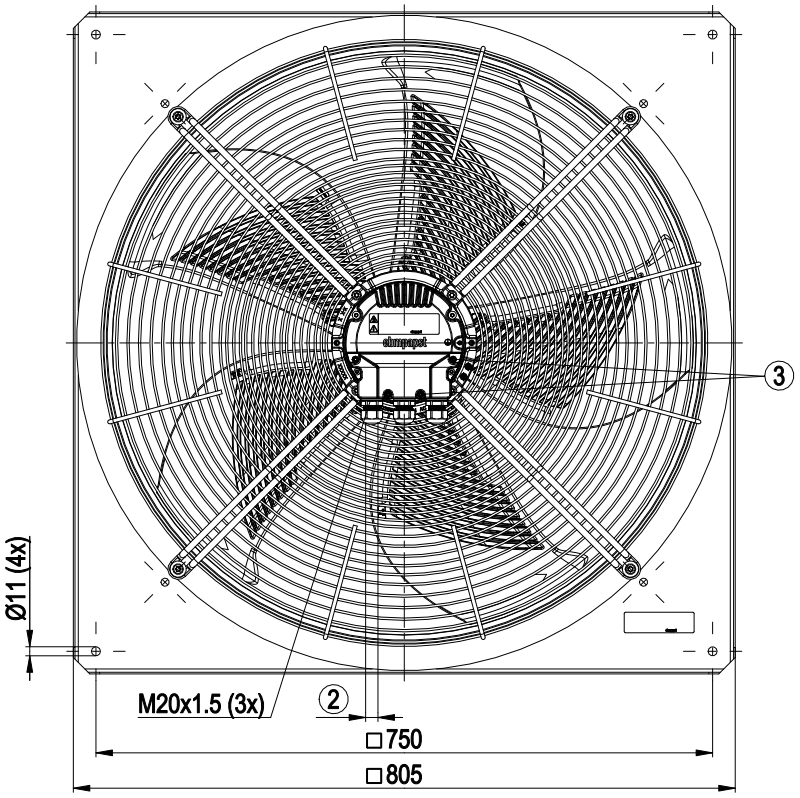


| | |
|---|---|
| 1 | Airflow direction "V" |
| 2 | Cable diameter min. 4 mm, max. 10 mm, tightening torque 4 ± 0.6 Nm |
| | (The tightening torque is designed for PVC cables. If the cable materials are different, the tightening torque may have to be adjusted) |
| 3 | Tightening torque 2±0.3 Nm |



ebm-papst Mulfingen GmbH & Co. KGaA & Co. KG · Bachmühle 2 · D-74673 Mulfingen · Phone +49 (0) 7938 81-0 ·sales@fansco.com · www.fansco.com

## Mounting dimensions

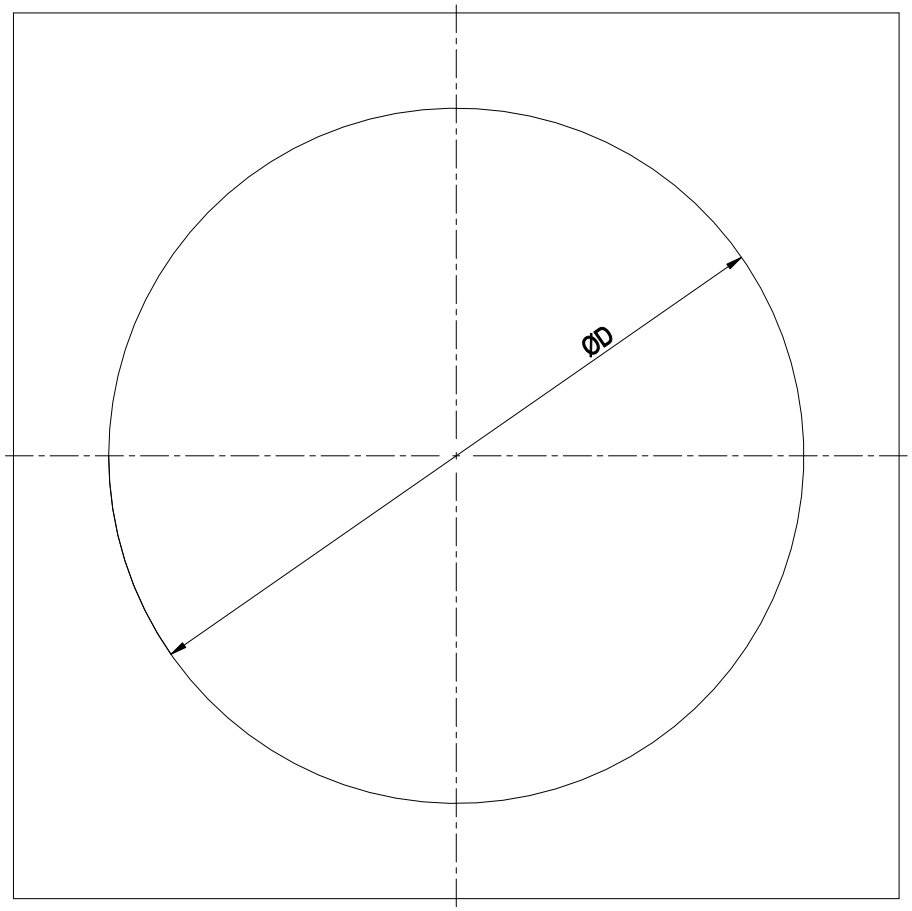


| | |
|---|---|
| | Diameter of the necessary recess for mounting the fan housing in the end device |
| | BG630: D = Ø785 mm |
| | BG710: D = Ø830 mm |
| | BG800: D = Ø950 mm |
| | BG910: D = Ø1050 mm |



ebm-papst Mulfingen GmbH & Co. KGaA & Co. KG · Bachmühle 2 · D-74673 Mulfingen · Phone +49 (0) 7938 81-0 ·sales@fansco.com · www.fansco.com

## Connection diagram

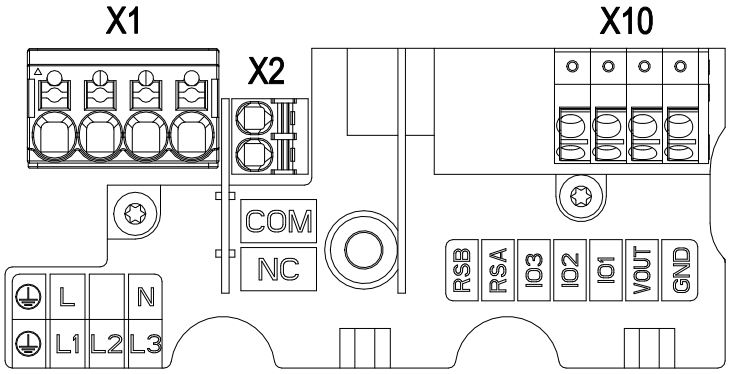


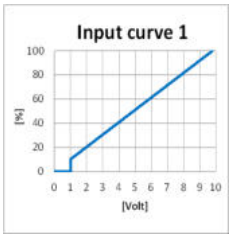


| No. | Conn. | Designation | Function/assignment |
|---|---|---|---|
| X1 | PWR | PE | Protective earth |
| X1 | PWR | L | Power supply, phase, see nameplate for voltage range |
| X1 | PWR | N | Power supply, neutral conductor, see nameplate for voltage range |
| X2 | CTRL | COM | Status relay, floating status contact, common connection, contact rating 250 VAC / 2 A (AC1) / min. 10 mA, reinforced insulation on supply side and on control interface side |
| X2 | CTRL | NC | Status relay, floating status contact, break for failure |
| X10 | CTRL | GND | Reference ground for control interface, SELV |
| X10 | CTRL | Vout | Voltage output 10 VDC +/-3%, Imax=10 mA<br>Short-circuit-proof, power supply for external devices, SELV |
| X10 | CTRL | IO1 | Factory setting:<br>Analog input 0-10 V / PWM, Ri=100 kΩ, function: set value<br>Characteristic curve parameterizable (see input characteristic curve "Input curve 1"), SELV<br>Function parameterizable at the factory (see table Optional interface functions) |
| X10 | CTRL | IO2 | Factory setting:<br>Open collector output, Umax=50 VDC, Imax=20 mA, function:Tacho output<br>1 pulse/revolution, SELV<br>Function parameterizable at factory (see table Optional interface functions) |



ebm-papst Mulfingen GmbH & Co. KGaA & Co. KG · Bachmühle 2 · D-74673 Mulfingen · Phone +49 (0) 7938 81-0 ·sales@fansco.com · www.fansco.com

## Terminal/plug assignment

### Basic (B5)

**Factory configuration option upon request**

○ *factory configuration option*

| | configurable IO mode | electrical specification | INPUT | | | | | OUTPUT | | | | |
|---|---|---|---|---|---|---|---|---|---|---|---|---|
| | | | source: set value | switch: parameter set: #1 / #2 | switch: direction of rotation: cw / ccw | switch: enable/disable input | configurable function | signal: tach out | signal: diagnostics out | signal: alarm out | signal: run monitoring | signal: status | signal: configurable function |
| IO1 | ○ Din1 (high active): digital input | active: parametrizable voltage x - 30 VDC<br>not active: pin open or parametrizable voltage < x VDC, SELV | | ○ | ○ | ○ | ○ | | | | | | |
| | ○ **Ain1 0-10 V/PWM:** analog input | Ri = 100 kΩ, characteristic curve parameterizable, $f_{PWM}$ = 1 k - 10 kHz, SELV | ○ | | | | | | | | | | |
| IO2 | ○ **Tach out** (open collector) | Umax = 50 VDC, Imax = 20 mA, SELV | | | | | | ○ | | | | | |
| | ○ **Diagnostics out** (open collector) | Umax = 50 VDC, Imax = 20 mA, SELV | | | | | | | ○ | | | | |
| | ○ **Alarm out** (open collector) | Umax = 50 VDC, Imax = 20 mA, SELV | | | | | | | | ○ | | | |
| | ○ **Open collector** | Umax = 50 VDC, Imax = 20 mA, SELV | | | | | | | | | | | ○ |
| COM NC | **Relais** | 250 VAC / 2 A (AC1) | | | | | | | | | ○ | ○ | ○ |
| Vout | **Voltage output** | Voltage 10 VDC, SELV | | | | | | | | | | | |



ebm-papst Mulfingen GmbH & Co. KGaA & Co. KG · Bachmühle 2 · D-74673 Mulfingen · Phone +49 (0) 7938 81-0 ·sales@fansco.com · www.fansco.com

**8300100733**

VWA0630BSPFS

# EC axial panel fan - AxiBlade

sickle-shaped blades (S series)

Fan housing with guard grille

## Curves: Air performance 50 Hz

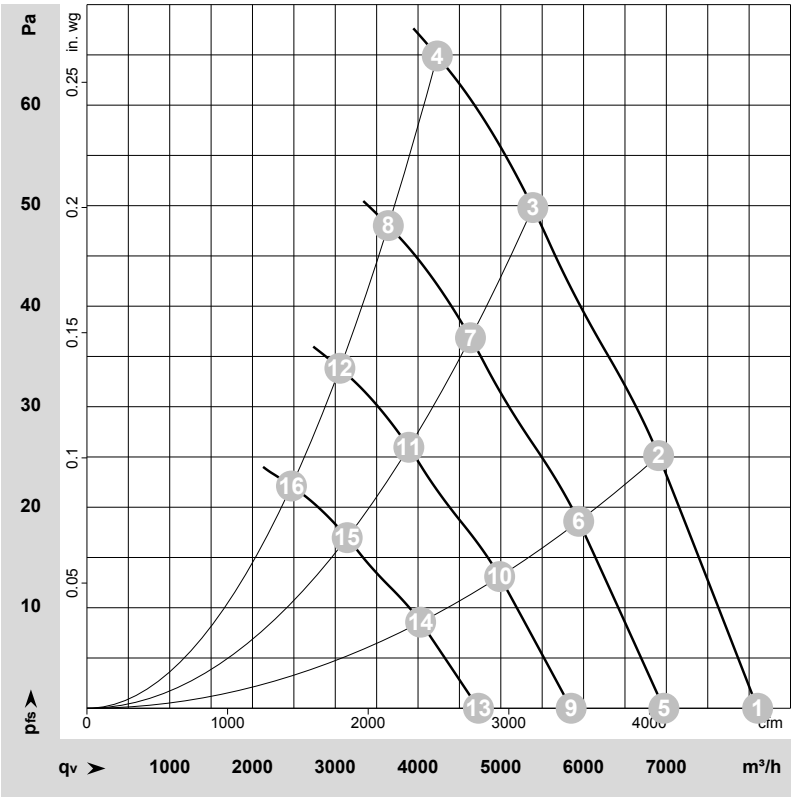


ρ = 1.15 kg/m³ ± 2 %

Measurement: LU-229923-1
Date: 2023-12-21
Housing: 15703-2-4037

Air performance measured according to ISO 5801 installation category A. For detailed information on the measurement setup, contact ebm-papst. Intake sound level: Sound power level according to ISO 13347 / sound pressure level measured at 1 m distance from fan axis. The values given are valid under the specified measuring conditions and may vary due to conditions of installation. For deviations from the standard configuration, the parameters have to be checked on the installed unit.

## Measured values

| | Wired | U | f | n | $P_e$ | I | $LpA_{in}$ | $LwA_{in}$ | $LwA_{out}$ | LwA | $q_V$ | $p_{fs}$ | $q_V$ | $p_{fs}$ |
|---|---|---|---|---|---|---|---|---|---|---|---|---|---|---|
| | | V | Hz | $min^{-1}$ | W | A | dB(A) | dB(A) | dB(A) | dB | $m^3/h$ | Pa | cfm | in. wg |
| 1 | 1~ | 230 | 50 | 650 | 109 | 0.75 | 57 | 63 | 63 | 66 | 8105 | 0 | 4770 | 0.00 |
| 2 | 1~ | 230 | 50 | 650 | 151 | 1.01 | 54 | 61 | 61 | 64 | 6905 | 25 | 4065 | 0.10 |
| 3 | 1~ | 230 | 50 | 650 | 189 | 1.24 | 55 | 62 | 62 | 65 | 5385 | 50 | 3170 | 0.20 |
| 4 | 1~ | 230 | 50 | 650 | 210 | 1.35 | 60 | 68 | 68 | 71 | 4235 | 65 | 2490 | 0.26 |
| 5 | 1~ | 230 | 50 | 560 | 69 | 0.48 | 53 | 59 | 60 | 62 | 6970 | 0 | 4100 | 0.00 |
| 6 | 1~ | 230 | 50 | 560 | 96 | 0.65 | 51 | 57 | 57 | 60 | 5940 | 19 | 3495 | 0.08 |
| 7 | 1~ | 230 | 50 | 560 | 120 | 0.79 | 51 | 58 | 58 | 61 | 4635 | 37 | 2725 | 0.15 |
| 8 | 1~ | 230 | 50 | 560 | 136 | 0.88 | 57 | 64 | 64 | 67 | 3640 | 48 | 2145 | 0.19 |
| 9 | 1~ | 230 | 50 | 470 | 41 | 0.28 | 49 | 55 | 55 | 58 | 5850 | 0 | 3445 | 0.00 |
| 10 | 1~ | 230 | 50 | 470 | 57 | 0.38 | 46 | 52 | 52 | 55 | 4985 | 13 | 2935 | 0.05 |
| 11 | 1~ | 230 | 50 | 470 | 71 | 0.47 | 47 | 54 | 54 | 57 | 3890 | 26 | 2290 | 0.10 |
| 12 | 1~ | 230 | 50 | 470 | 80 | 0.52 | 52 | 60 | 60 | 63 | 3055 | 34 | 1800 | 0.14 |
| 13 | 1~ | 230 | 50 | 380 | 22 | 0.15 | 43 | 50 | 50 | 53 | 4730 | 0 | 2785 | 0.00 |
| 14 | 1~ | 230 | 50 | 380 | 30 | 0.20 | 41 | 47 | 47 | 50 | 4030 | 9 | 2375 | 0.04 |
| 15 | 1~ | 230 | 50 | 380 | 38 | 0.25 | 41 | 48 | 48 | 51 | 3145 | 17 | 1850 | 0.07 |
| 16 | 1~ | 230 | 50 | 380 | 42 | 0.28 | 47 | 54 | 55 | 57 | 2470 | 22 | 1455 | 0.09 |

Wired = Wiring · U = Voltage · f = Frequency · n = Speed (rpm) · $P_e$ = Power consumption · I = Current draw · $LpA_{in}$ = Sound pressure level intake side · $LwA_{in}$ = Sound power level intake side
$LwA_{out}$ = Sound power level outlet side · $q_V$ = Air flow · $p_{fs}$ = Pressure increase



ebm-papst Mulfingen GmbH & Co. KGaA & Co. KG · Bachmühle 2 · D-74673 Mulfingen · Phone +49 (0) 7938 81-0 ·sales@fansco.com · www.fansco.com