8300100657

VBH0190SSLES

EC centrifugal module - RadiCal

backward-curved, single-intake

with housing

ebm-papst Mulfingen GmbH & Co. KG
Bachmühle 2 · D-74673 Mulfingen
Phone +49 7938 81-0
Fax +49 7938 81-110
sales@fansco.com
www.fansco.com

Limited partnership · Headquarters Mulfingen
Amtsgericht (court of registration) Stuttgart · HRA 590344

General partner Elektrobau Mulfingen GmbH · Headquarters Mulfingen
Amtsgericht (court of registration) Stuttgart · HRB 590142

Nominal data

Item	**8300100657**
Motor	**E06003-23**

Phase		1~
Nominal voltage	VAC	230
Nominal voltage range	VAC	200 .. 240
Frequency	Hz	50/60
Method of obtaining data		ml
Speed (rpm)	min^{-1}	4350
Power consumption	W	170
Current draw	A	1.4
Min. ambient temperature	°C	-25
Max. ambient temperature	°C	60

ml = Max. load · me = Max. efficiency · fa = Free air · cs = Customer specification · ce = Customer equipment
Subject to change

Data according to Commission Regulation (EU) 327/2011 (prEN 17166)

		Actual	Req. 2015
01 Overall efficiency η_{es}	%	65.7	43.5
02 Measurement category		A	
03 Efficiency category		Static	
04 Efficiency grade N		84.2	62
05 Variable speed drive		Yes	

09 Power consumption P_{ed}	kW	0.17
09 Air flow q_v	m³/h	715
09 Pressure increase p_{fs}	Pa	503
10 Speed (rpm) n	min^{-1}	4410
11 Specific ratio*		1.01

Data obtained at optimum efficiency level.

* Specific ratio = 1 + p_{fs} / 100 000 Pa

LU-229329

The efficiency values displayed for achieving conformity with the Ecodesign Regulation EU 327/2011 has been reached with defined air duct components (e.g. inlet rings).
The dimensions must be requested from ebm-papst. If other air conduction geometries are used on the installation side, the ebm-papst evaluation loses its validity/the conformity must be confirmed again.

The product does not fall within the scope of Regulation (EU) 2019/1781 due to the exception specified in Article 2 (2a) (motors completely integrated into a product).

EC centrifugal module - RadiCal

backward-curved, single-intake
with housing

Technical description

Weight	1.75 kg
Size	190 mm
Motor size	60
Rotor surface	Thick-film passivated
Electronics housing material	Die-cast aluminum
Impeller material	PP plastic
Housing material	PP plastic
Number of blades	7
Direction of rotation	Clockwise, viewed toward rotor
Degree of protection	IP54
Insulation class	"B"
Moisture (F) / Environmental (H) protection class	H1
Max. permitted ambient temp. for motor (transport/storage)	+ 80 °C
Min. permitted ambient temp. for motor (transport/storage)	- 40 °C
Installation position	Any
Condensation drainage holes	None, open rotor
Mode	S1
Motor bearing	Ball bearing
Technical features	- Output 10 VDC, max. 10 mA - Locked-rotor detection - Tach output - Speed control - Power limiter - Motor current limitation - Soft start - Control input 0-10 VDC / PWM - Control interface with SELV potential safely disconnected from the mains - Overvoltage detection - Thermal overload protection for electronics/motor - Line undervoltage detection
EMC immunity to interference	According to EN 61000-6-2 (industrial environment)
EMC interference emission	According to EN 61000-6-4 (industrial environment)
Touch current according to IEC 60990 (measuring circuit Fig. 4, TN system)	<= 3.5 mA
Motor protection	Electronic motor protection
With cable	Variable
Protection class assignment	I; If a protective earth is connected by the customer This component for installation may have several local protection classes. This information relates to this component's basic design. The final protection class is based on the component's intended installation and connection.
Conformity with standards	EN 60034-1; EN 60204-1; EN 60335-1; CE; UKCA
Approval	UL 1004-7 + 60730-1; CSA C22.2 No. 77 + CAN/CSA-E60730-1

ebm-papst Mulfingen GmbH & Co. KG · Bachmühle 2 · D-74673 Mulfingen · Phone +49 (0) 7938 81-0 · Fax +49 (0) 7938 81-110 · sales@fansco.com · www.fansco.com

EC centrifugal module - RadiCal

backward-curved, single-intake
with housing

Product drawing

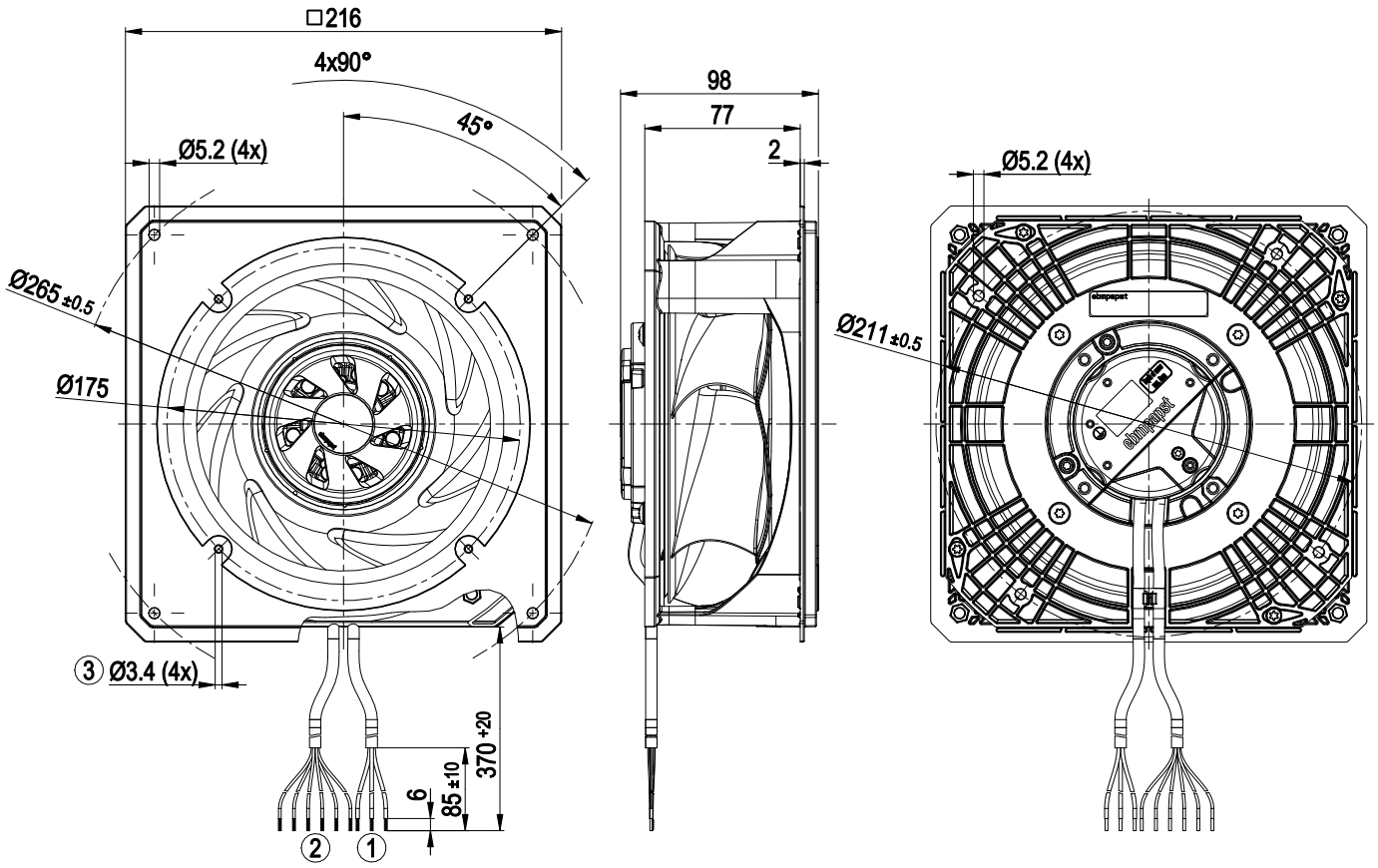

1	Supply line (PWR) PVC AWG20
	3x splice
2	Control wire (CTRL) PVC AWG22
	6x splice
3	Fastening holes for FlowGrid 8217117433 (not included in scope of delivery) are provided and must only be used for FlowGrid

ebm-papst Mulfingen GmbH & Co. KG · Bachmühle 2 · D-74673 Mulfingen · Phone +49 (0) 7938 81-0 · Fax +49 (0) 7938 81-110 · sales@fansco.com · www.fansco.com

Mounting dimensions

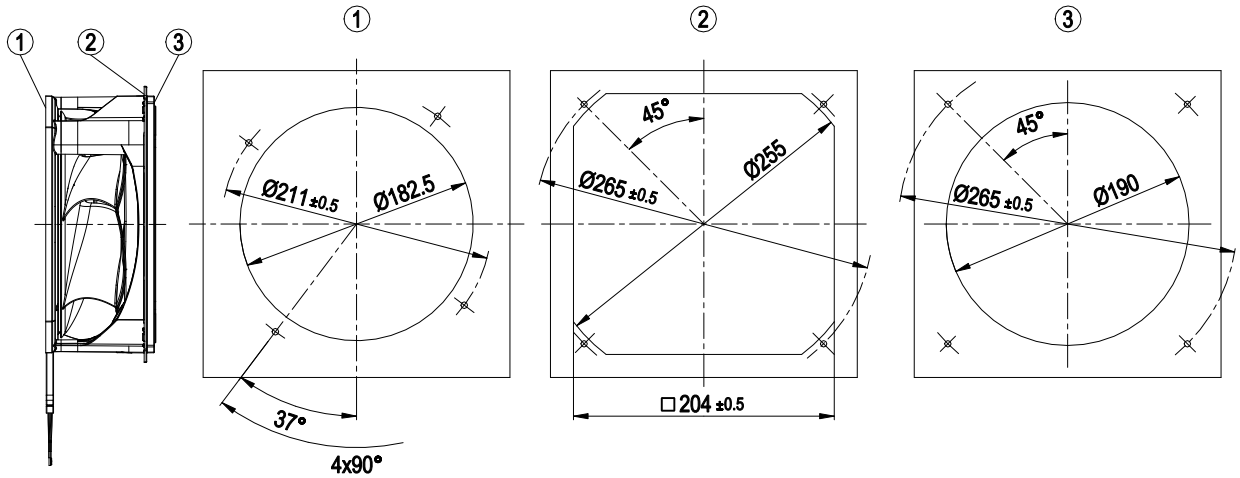

1	Installation of motor plate
2	Installation of nozzle plate on outlet side
3	Installation of nozzle plate on intake side

ebm-papst Mulfingen GmbH & Co. KG · Bachmühle 2 · D-74673 Mulfingen · Phone +49 (0) 7938 81-0 · Fax +49 (0) 7938 81-110 · sales@fansco.com · www.fansco.com

Connection diagram

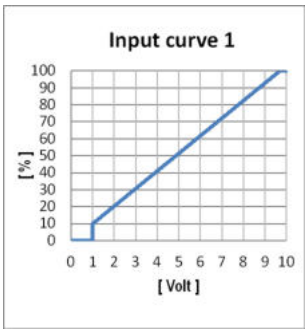

No.	Conn.	Designation	Color	Function/assignment
	PWR	L	black	Power supply, phase, see nameplate for voltage range
	PWR	N	blue	Power supply, neutral conductor, see nameplate for voltage range
	PWR	PE	green/yellow	Protective earth
	CTRL	GND	blue	Reference ground for control interface, SELV
	CTRL	IO1	yellow	Factory setting: Analog input 0-10 V/PWM, Ri=100 KΩ, fPWM=1 kHz..10 kHz, Function: Speed set value Characteristic curve parameterizable (see "Input curve 1"), SELV Function parameterizable at the factory (see Optional interface functions table)
	CTRL	IO2	white	Factory setting: Open collector output, Umax=50 VDC, Imax= 10 mA, function: Tach output 1 pulse/revolution, SELV Function parameterizable at factory (see table Optional interface functions)
	CTRL	Vout	red	Voltage output 10 VDC +/-3%, Imax=10 mA Short-circuit-proof, power supply for external devices, SELV
	CTRL	-	gray	No function
	CTRL	-	brown	No function

ebm-papst Mulfingen GmbH & Co. KG · Bachmühle 2 · D-74673 Mulfingen · Phone +49 (0) 7938 81-0 · Fax +49 (0) 7938 81-110 · sales@fansco.com · www.fansco.com

Terminal/plug assignment

Basic (B4)
Factory configuration option upon request

○ *Factory configuration option*

	configurable IO mode	electrical specification	INPUT: source: set value	INPUT: switch: parameter set: #1 / #2	INPUT: switch: direction of rotation: cw / ccw	INPUT: switch: enable/disable input	INPUT: configurable function	OUTPUT: signal: tach out	OUTPUT: signal: diagnostics out	OUTPUT: signal: alarm out	OUTPUT: signal: run monitoring	OUTPUT: signal: status	OUTPUT: signal: configurable function
IO1	○ **Din1 (high active)**: digital input	active: parameterizable voltage x-30 VDC not active: pin open or parameterizable voltage <x VDC, SELV		○	○	○	○						
	○ **Ain1 0-10 V/PWM:** analog input	Ri = 100 kΩ, characteristic curve parameterizable, f_{PWM} = 1k..10 kHz, SELV	○				○						
IO2	○ **Tach out** (open collector)	Umax=50 VDC, Imax=10 mA, SELV						○					
	○ **Diagnostics out** (open collector)	Umax=50 VDC, Imax=10 mA, SELV							○				
	○ **Alarm out** (open collector)	Umax=50 VDC, Imax=10 mA, SELV								○			
	○ **Open collector**	Umax=50 VDC, Imax=10 mA, SELV									○	○	○
Vout	Voltage output	Voltage10 VDC, SELV											

ebm-papst Mulfingen GmbH & Co. KG · Bachmühle 2 · D-74673 Mulfingen · Phone +49 (0) 7938 81-0 · Fax +49 (0) 7938 81-110 · sales@fansco.com · www.fansco.com

8300100657

VBH0190SSLES

EC centrifugal module - RadiCal

backward-curved, single-intake

with housing

Curves: Air performance 50 Hz

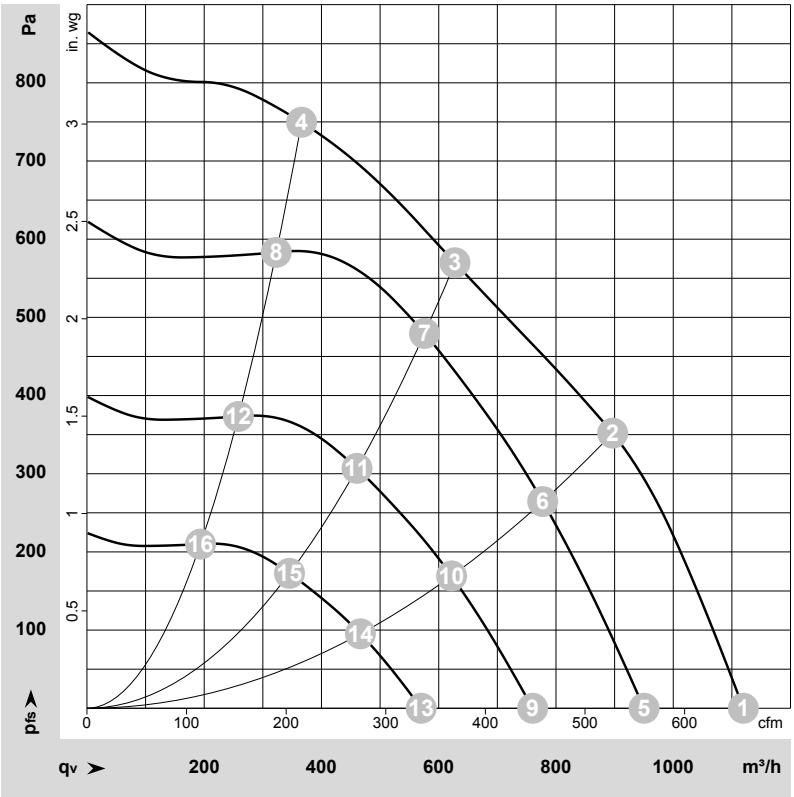

ρ = 1.15 kg/m³ ± 2 %

Measurement: LU-229329-1

Air performance measured according to ISO 5801 installation category A. For detailed information on the measurement setup, contact ebm-papst. Intake sound level: Sound power level according to ISO 13347 / sound pressure level measured at 1 m distance from fan axis. The values given are valid under the specified measuring conditions and may vary due to conditions of installation. For deviations from the standard configuration, the parameters have to be checked on the installed unit.

Measured values

	Wired	U	f	n	P_e	I	LpA_{in}	LwA_{in}	q_V	p_{fs}	q_V	p_{fs}
		V	Hz	min^{-1}	W	A	dB(A)	dB(A)	m^3/h	Pa	cfm	in. wg
1	1~	230	50	4715	121	1.02	72	79	1120	0	660	0.00
2	1~	230	50	4615	170	1.40	67	75	895	350	530	1.41
3	1~	230	50	4350	170	1.40	66	73	630	570	370	2.29
4	1~	230	50	4535	170	1.40	73	81	365	750	215	3.01
5	1~	230	50	4000	74	0.62	67	75	950	0	560	0.00
6	1~	230	50	4000	112	0.92	64	71	775	265	455	1.06
7	1~	230	50	4000	133	1.09	63	71	575	481	340	1.93
8	1~	230	50	4000	118	0.96	70	78	325	583	190	2.34
9	1~	230	50	3200	38	0.32	62	70	760	0	445	0.00
10	1~	230	50	3200	58	0.47	58	66	620	169	365	0.68
11	1~	230	50	3200	68	0.56	58	65	460	308	270	1.24
12	1~	230	50	3200	61	0.49	65	72	260	373	150	1.50
13	1~	230	50	2400	16	0.13	55	63	570	0	335	0.00
14	1~	230	50	2400	24	0.20	51	59	465	95	275	0.38
15	1~	230	50	2400	29	0.24	51	58	345	173	205	0.69
16	1~	230	50	2400	26	0.21	57	65	195	210	115	0.84

Wired = Wiring · U = Voltage · f = Frequency · n = Speed (rpm) · P_e = Power consumption · I = Current draw · LpA_{in} = Sound pressure level intake side · LwA_{in} = Sound power level intake side
q_V = Air flow · p_{fs} = Pressure increase

ebm-papst Mulfingen GmbH & Co. KG · Bachmühle 2 · D-74673 Mulfingen · Phone +49 (0) 7938 81-0 · Fax +49 (0) 7938 81-110 · sales@fansco.com · www.fansco.com