**8300100439**

VCS0225RSLFS

# EC centrifugal fan - RadiCal

backward-curved, single-intake

with housing (flange)

**ebm-papst Mulfingen GmbH & Co. KG**
Bachmühle 2 · D-74673 Mulfingen
Phone +49 7938 81-0
Fax +49 7938 81-110
info1@de.fansco.com
www.fansco.com

Limited partnership · Headquarters Mulfingen
Amtsgericht (court of registration) Stuttgart · HRA 590344

General partner Elektrobau Mulfingen GmbH · Headquarters Mulfingen
Amtsgericht (court of registration) Stuttgart · HRB 590142

## Nominal data

| | |
|---|---|
| **Item** | **8300100439** |
| **Motor** | **E06003-30** |

| | | |
|---|---|---|
| Phase | | 1~ |
| Nominal voltage | VAC | 230 |
| Nominal voltage range | VAC | 200 .. 240 |
| Frequency | Hz | 50/60 |
| Method of obtaining data | | ml |
| Speed (rpm) | $min^{-1}$ | 2900 |
| Power consumption | W | 170 |
| Current draw | A | 1.35 |
| Min. ambient temperature | °C | -25 |
| Max. ambient temperature | °C | 60 |

ml = Max. load · me = Max. efficiency · fa = Free air · cs = Customer specification · ce = Customer equipment
Subject to change

## Data according to Commission Regulation (EU) 327/2011 (prEN 17166)

| | | Actual | Req. 2015 |
|---|---|---|---|
| 01 Overall efficiency $\eta_{es}$ | % | 67.8 | 42.4 |
| 02 Measurement category | | A | |
| 03 Efficiency category | | Static | |
| 04 Efficiency grade N | | 86.4 | 61 |
| 05 Variable speed drive | | Yes | |

| | | |
|---|---|---|
| 09 Power consumption $P_{ed}$ | kW | 0.16 |
| 09 Air flow $q_v$ | m³/h | 610 |
| 09 Pressure increase $p_{fs}$ | Pa | 599 |
| 10 Speed (rpm) n | $min^{-1}$ | 2980 |
| 11 Specific ratio* | | 1.01 |

Data obtained at optimum efficiency level.

* Specific ratio = 1 + $p_{fs}$ / 100 000 Pa

LU-220252

The efficiency values displayed for achieving conformity with the Ecodesign Regulation EU 327/2011 has been reached with defined air duct components (e.g. inlet rings).
The dimensions must be requested from ebm-papst. If other air conduction geometries are used on the installation side, the ebm-papst evaluation loses its validity/the conformity must be confirmed again.

The product does not fall within the scope of Regulation (EU) 2019/1781 due to the exception specified in Article 2 (2a) (motors completely integrated into a product).

# EC centrifugal fan - RadiCal

backward-curved, single-intake
with housing (flange)

## Technical description

| | |
|---|---|
| **Weight** | 2.86 kg |
| **Size** | 225 mm |
| **Motor size** | 60 |
| **Rotor surface** | Thick-film passivated |
| **Impeller material** | PP plastic |
| **Housing material** | PP plastic |
| **Number of blades** | 7 |
| **Direction of rotation** | Clockwise, viewed toward rotor |
| **Degree of protection** | IP54 |
| **Insulation class** | "B" |
| **Moisture (F) / Environmental (H) protection class** | H1 |
| **Max. permitted ambient temp. for motor (transport/storage)** | +80 °C |
| **Min. permitted ambient temp. for motor (transport/storage)** | -40 °C |
| **Installation position** | Any |
| **Condensation drainage holes** | None, open rotor |
| **Mode** | S1 |
| **Motor bearing** | Ball bearing |
| **Technical features** | - Output 10 VDC, max. 10 mA<br>- Locked-rotor detection<br>- Tach output<br>- Speed control<br>- Power limiter<br>- Motor current limitation<br>- Soft start<br>- Control input 0-10 VDC / PWM<br>- Control interface with SELV potential safely disconnected from the mains<br>- Overvoltage detection<br>- Thermal overload protection for electronics/motor<br>- Line undervoltage detection |
| **EMC immunity to interference** | According to EN 61000-6-2 (industrial environment) |
| **EMC interference emission** | According to EN 61000-6-4 (industrial environment) |
| **Touch current according to IEC 60990 (measuring circuit Fig. 4, TN system)** | <= 3.5 mA |
| **Motor protection** | Electronic motor protection |
| **With cable** | Variable |
| **Protection class assignment** | I; If a protective earth is connected by the customer<br>This component for installation may have several local protection classes. This information relates to this component's basic design.<br>The final protection class is based on the component's intended installation and connection. |
| **Conformity with standards** | EN 60034-1; EN 60204-1; EN 60335-1; CE; UKCA |
| **Approval** | CSA C22.2 No. 77 + CAN/CSA-E60730-1; UL 1004-7 + 60730-1 |



ebm-papst Mulfingen GmbH & Co. KG · Bachmühle 2 · D-74673 Mulfingen · Phone +49 (0) 7938 81-0 · Fax +49 (0) 7938 81-110 · info1@de.fansco.com · www.fansco.com

**8300100439**

VCS0225RSLFS

# EC centrifugal fan - RadiCal

backward-curved, single-intake

with housing (flange)

## Product drawing

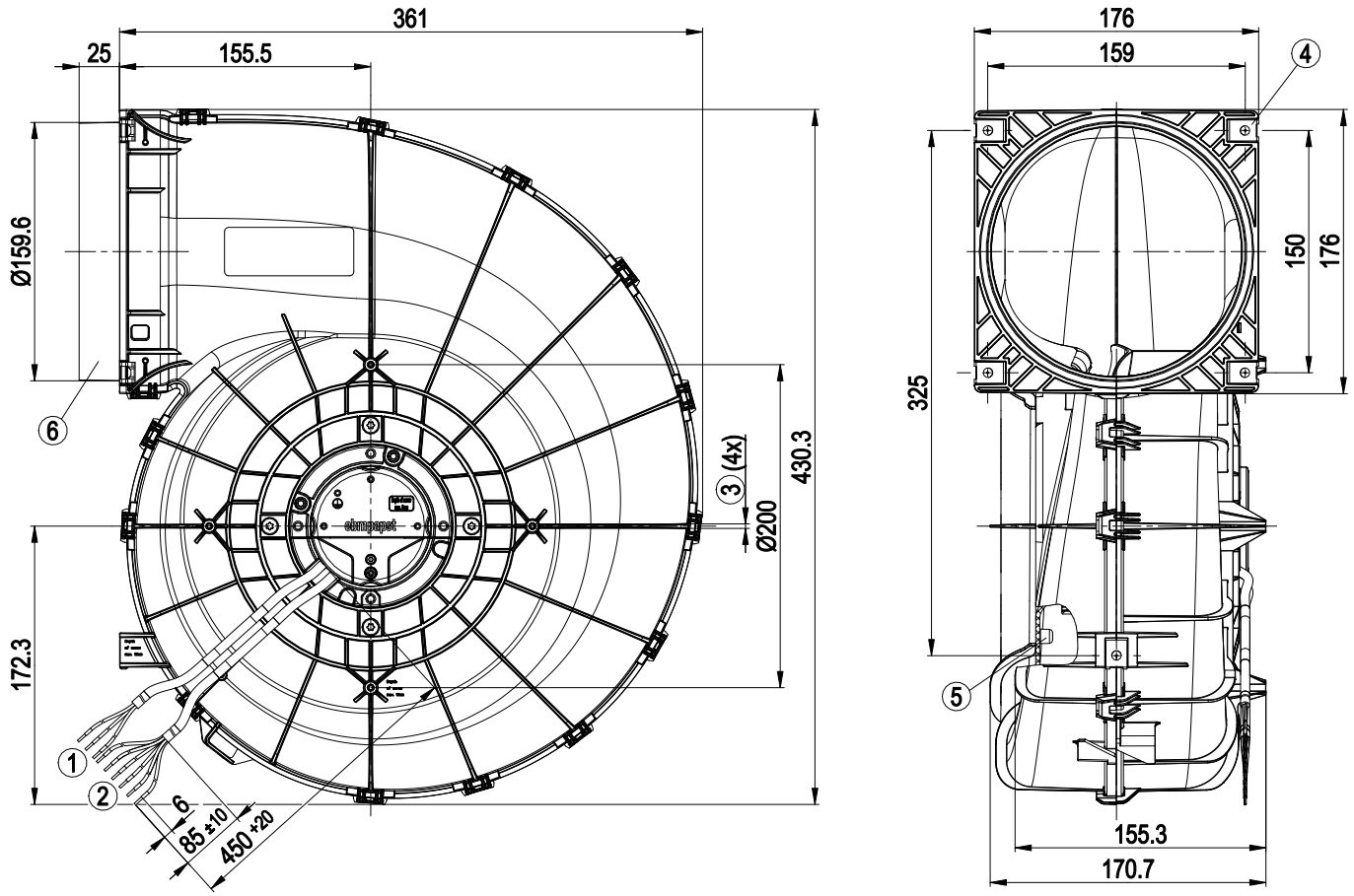


| | |
|---|---|
| 1 | Supply line (PWR) PVC AWG20 |
| | 3x splice |
| 2 | Control wire (CTRL) PVC AWG22 |
| | 6x splice |
| 3 | Tapping hole prepared for self-tapping screw for fastening plastics (Remform) dia. 4 mm, clearance for screw max. 15 mm. The torque is to be determined on the basis of the screw. |
| 4 | 5x sheet metal nut for thread EN ISO 1478-ST4.8 (max. screw length 16 mm plus thickness of mounting material) |
| 5 | Screw-on domes are only permissible for Flowgrid! |
| 6 | Connecting sleeve not suitable for installation with pipe clamps |



ebm-papst Mulfingen GmbH & Co. KG · Bachmühle 2 · D-74673 Mulfingen · Phone +49 (0) 7938 81-0 · Fax +49 (0) 7938 81-110 · info1@de.fansco.com · www.fansco.com

## Connection diagram

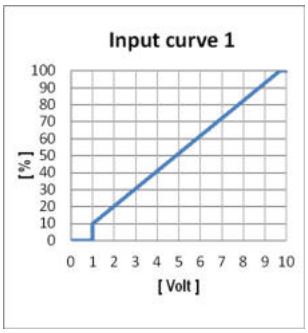


| No. | Conn. | Designation | Color | Function/assignment |
|---|---|---|---|---|
| | PWR | L | black | Power supply, phase, see nameplate for voltage range |
| | PWR | N | blue | Power supply, neutral conductor, see nameplate for voltage range |
| | PWR | PE | green/yellow | Protective earth |
| | | | | |
| | CTRL | GND | blue | Reference ground for control interface, SELV |
| | CTRL | IO1 | yellow | Factory setting:<br>Analog input 0-10 V/PWM, Ri=100 KΩ, fPWM=1 kHz..10 kHz,<br>Function: Speed set value<br>Characteristic curve parameterizable (see "Input curve 1"), SELV<br>Function parameterizable at the factory (see Optional interface functions table) |
| | CTRL | IO2 | white | Factory setting:<br>Open collector output, Umax=50 VDC, Imax= 10 mA, function: Tach output<br>1 pulse/revolution, SELV<br>Function parameterizable at factory (see table Optional interface functions) |
| | CTRL | Vout | red | Voltage output 10 VDC +/-3%, Imax=10 mA<br>Short-circuit-proof, power supply for external devices, SELV |
| | CTRL | - | gray | No function |
| | CTRL | - | brown | No function |



ebm-papst Mulfingen GmbH & Co. KG · Bachmühle 2 · D-74673 Mulfingen · Phone +49 (0) 7938 81-0 · Fax +49 (0) 7938 81-110 · info1@de.fansco.com · www.fansco.com

## Terminal/plug assignment

### Basic (B4)

**Factory configuration option upon request**

○ *Factory configuration option*

| | configurable IO mode | electrical specification | INPUT: source: set value | INPUT: switch: parameter set: #1 / #2 | INPUT: switch: direction of rotation: cw / ccw | INPUT: switch: enable/disable input | INPUT: configurable function | OUTPUT: signal: tach out | OUTPUT: signal: diagnostics out | OUTPUT: signal: alarm out | OUTPUT: signal: run monitoring | OUTPUT: signal: status | OUTPUT: signal: configurable function |
|---|---|---|---|---|---|---|---|---|---|---|---|---|---|
| IO1 | ○ **Din1 (high active)**: digital input | active: parameterizable voltage x-30 VDC<br>not active: pin open or parameterizable voltage <x VDC, SELV | | ○ | ○ | ○ | ○ | | | | | | |
| | ○ **Ain1 0-10 V/PWM:** analog input | Ri = 100 kΩ, characteristic curve parameterizable, $f_{PWM}$ = 1k..10 kHz, SELV | ○ | | | | ○ | | | | | | |
| IO2 | ○ **Tach out** (open collector) | Umax=50 VDC, Imax=10 mA, SELV | | | | | | ○ | | | | | |
| | ○ **Diagnostics out** (open collector) | Umax=50 VDC, Imax=10 mA, SELV | | | | | | | ○ | | | | |
| | ○ **Alarm out** (open collector) | Umax=50 VDC, Imax=10 mA, SELV | | | | | | | | ○ | | | |
| | ○ **Open collector** | Umax=50 VDC, Imax=10 mA, SELV | | | | | | | | | ○ | ○ | ○ |
| Vout | Voltage output | Voltage10 VDC, SELV | | | | | | | | | | | |



ebm-papst Mulfingen GmbH & Co. KG · Bachmühle 2 · D-74673 Mulfingen · Phone +49 (0) 7938 81-0 · Fax +49 (0) 7938 81-110 · info1@de.fansco.com · www.fansco.com

**8300100439**

VCS0225RSLFS

# EC centrifugal fan - RadiCal

backward-curved, single-intake

with housing (flange)

## Curves: Air performance 50 Hz

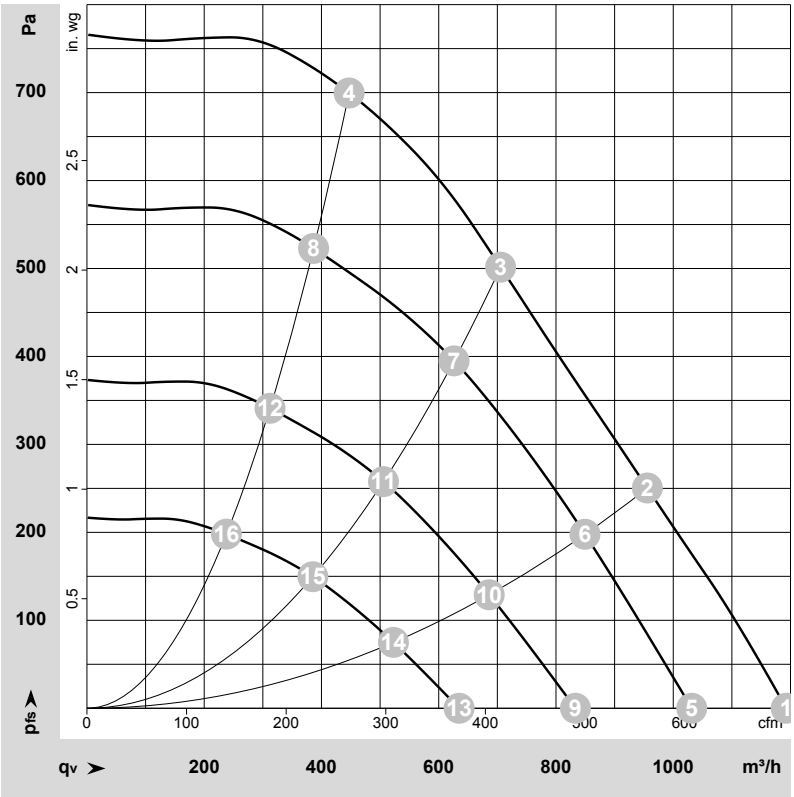


ρ = 1.15 kg/m³ ± 2 %

Measurement: LU-220252-1

Air performance measured according to ISO 5801 installation category A. For detailed information on the measurement setup, contact ebm-papst. Intake sound level: Sound power level according to ISO 13347 / sound pressure level measured at 1 m distance from fan axis. The values given are valid under the specified measuring conditions and may vary due to conditions of installation. For deviations from the standard configuration, the parameters have to be checked on the installed unit.

## Measured values

| | Wired | U | f | n | $P_e$ | I | $LpA_{in}$ | $LwA_{in}$ | $q_V$ | $p_{fs}$ | $q_V$ | $p_{fs}$ |
|---|---|---|---|---|---|---|---|---|---|---|---|---|
| | | V | Hz | $min^{-1}$ | W | A | dB(A) | dB(A) | $m^3/h$ | Pa | cfm | in. wg |
| 1 | 1~ | 230 | 50 | 3000 | 162 | 1.32 | 72 | 77 | 1195 | 0 | 700 | 0.00 |
| 2 | 1~ | 230 | 50 | 2925 | 170 | 1.35 | 67 | 73 | 955 | 250 | 565 | 1.00 |
| 3 | 1~ | 230 | 50 | 2900 | 170 | 1.35 | 64 | 70 | 705 | 500 | 415 | 2.01 |
| 4 | 1~ | 230 | 50 | 3000 | 154 | 1.27 | 67 | 73 | 445 | 700 | 265 | 2.81 |
| 5 | 1~ | 230 | 50 | 2600 | 105 | 0.85 | 68 | 73 | 1030 | 0 | 605 | 0.00 |
| 6 | 1~ | 230 | 50 | 2600 | 120 | 0.97 | 64 | 70 | 850 | 198 | 500 | 0.79 |
| 7 | 1~ | 230 | 50 | 2600 | 120 | 0.97 | 61 | 67 | 625 | 397 | 370 | 1.59 |
| 8 | 1~ | 230 | 50 | 2600 | 100 | 0.82 | 63 | 69 | 385 | 523 | 230 | 2.10 |
| 9 | 1~ | 230 | 50 | 2100 | 55 | 0.45 | 62 | 68 | 835 | 0 | 490 | 0.00 |
| 10 | 1~ | 230 | 50 | 2100 | 63 | 0.51 | 59 | 64 | 685 | 129 | 405 | 0.52 |
| 11 | 1~ | 230 | 50 | 2100 | 63 | 0.51 | 56 | 62 | 505 | 259 | 300 | 1.04 |
| 12 | 1~ | 230 | 50 | 2100 | 53 | 0.43 | 58 | 64 | 310 | 341 | 185 | 1.37 |
| 13 | 1~ | 230 | 50 | 1600 | 25 | 0.20 | 56 | 61 | 635 | 0 | 375 | 0.00 |
| 14 | 1~ | 230 | 50 | 1600 | 28 | 0.23 | 52 | 57 | 525 | 75 | 310 | 0.30 |
| 15 | 1~ | 230 | 50 | 1600 | 28 | 0.23 | 49 | 55 | 385 | 150 | 225 | 0.60 |
| 16 | 1~ | 230 | 50 | 1600 | 23 | 0.19 | 51 | 57 | 240 | 198 | 140 | 0.79 |

Wired = Wiring · U = Voltage · f = Frequency · n = Speed (rpm) · $P_e$ = Power consumption · I = Current draw · $LpA_{in}$ = Sound pressure level intake side · $LwA_{in}$ = Sound power level intake side
$q_V$ = Air flow · $p_{fs}$ = Pressure increase



ebm-papst Mulfingen GmbH & Co. KG · Bachmühle 2 · D-74673 Mulfingen · Phone +49 (0) 7938 81-0 · Fax +49 (0) 7938 81-110 · info1@de.fansco.com · www.fansco.com