8300100182

VBF0710XTXNS

EC centrifugal module

backward-curved, single-intake

with cube design

ebm-papst Mulfingen GmbH & Co. KG
Bachmühle 2 · D-74673 Mulfingen
Phone +49 7938 81-0
Fax +49 7938 81-110
info1@de.fansco.com
www.fansco.com

Limited partnership · Headquarters Mulfingen
Amtsgericht (court of registration) Stuttgart · HRA 590344

General partner Elektrobau Mulfingen GmbH · Headquarters Mulfingen
Amtsgericht (court of registration) Stuttgart · HRB 590142

Nominal data

Item	**8300100182**
Motor	**E28001-80**

Phase		3~
Nominal voltage	VAC	400
Nominal voltage range	VAC	380 .. 480
Frequency	Hz	50/60
Method of obtaining data		ml
Speed (rpm)	min^{-1}	2130
Power consumption	W	24000
Current draw	A	38
Min. ambient temperature	°C	-40
Max. ambient temperature	°C	40

ml = Max. load · me = Max. efficiency · fa = Free air · cs = Customer specification · ce = Customer equipment
Subject to change

Data according to Commission Regulation (EU) 327/2011 (prEN 17166)

		Actual	Req. 2015
01 Overall efficiency η_{es}	%	68.2	62.9
02 Measurement category		A	
03 Efficiency category		Static	
04 Efficiency grade N		67.3	62
05 Variable speed drive		Yes	

09 Power consumption P_{ed}	kW	24.67
09 Air flow q_v	m³/h	25980
09 Pressure increase p_{fs}	Pa	2265
10 Speed (rpm) n	min^{-1}	2120
11 Specific ratio*		1.02

Data obtained at optimum efficiency level.

* Specific ratio = 1 + p_{fs} / 100 000 Pa

LU-221698

The efficiency values displayed for achieving conformity with the Ecodesign Regulation EU 327/2011 has been reached with defined air duct components (e.g. inlet rings).
The dimensions must be requested from ebm-papst. If other air conduction geometries are used on the installation side, the ebm-papst evaluation loses its validity/the conformity must be confirmed again.

The product does not fall within the scope of Regulation (EU) 2019/1781 due to the exception specified in Article 2 (2a) (motors completely integrated into a product).

EC centrifugal module

backward-curved, single-intake
with cube design

Technical description

Weight	173 kg
Size	710 mm
Motor size	280
Rotor surface	Unpainted
Electronics housing material	Die-cast aluminum
Impeller material	Sheet aluminum
Support plate material	Sheet steel, galvanized
Spacer material	Aluminum
Inlet nozzle material	Sheet steel, galvanized
Support bracket material	Steel, coated with white-aluminum plastic (RAL 9006)
Number of blades	7
Direction of rotation	Clockwise, viewed toward rotor
Degree of protection	IP50
Insulation class	"F"
Moisture (F) / Environmental (H) protection class	H1
Ambient temperature note	Occasional start-up at temperatures between -40°C and -25°C is permitted. For continuous operation at ambient temperatures below -25°C (such as refrigeration applications), use must be made of a fan design with special low-temperature bearings.
Max. permitted ambient temp. for motor (transport/storage)	+80 °C
Min. permitted ambient temp. for motor (transport/storage)	-40 °C
Installation position	See legend on product drawing
Mode	S1
Motor bearing	Hybrid bearing
Technical features	- Operation and alarm display with LED - Locked-rotor detection - Speed control - External 15-50 VDC input (parameterization) - Alarm relay - Configurable inputs/outputs (I/O) - Power limiter - MODBUS - Motor current limitation - Soft start - Control interface with SELV potential safely disconnected from the mains - Temperature derating - Thermal overload protection for electronics/motor - Line undervoltage / phase failure detection - Vibration sensor
Touch current according to IEC 60990 (measuring circuit Fig. 4, TN system)	> 3.5 mA
Electrical hookup	Terminal box
Protection class assignment	I; If a protective earth is connected. The built-in component has several local protection class assignments. The final protection class is determined by the intended installation.
Conformity with standards	EN 61800-5-1; CE

ebm-papst Mulfingen GmbH & Co. KG · Bachmühle 2 · D-74673 Mulfingen · Phone +49 (0) 7938 81-0 · Fax +49 (0) 7938 81-110 ·sales@fansco.com · www.fansco.com

8300100182

VBF0710XTXNS

EC centrifugal module

backward-curved, single-intake

with cube design

Product drawing

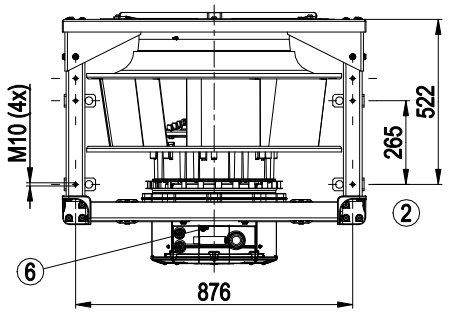

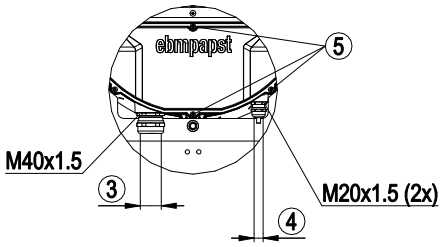

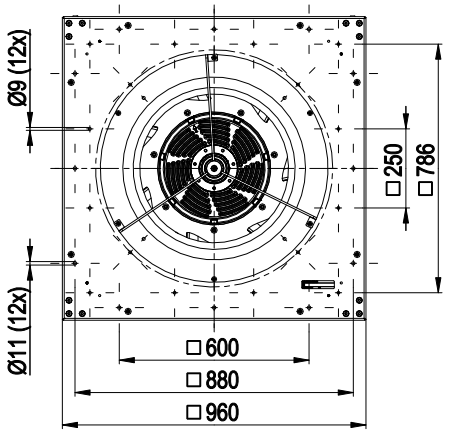

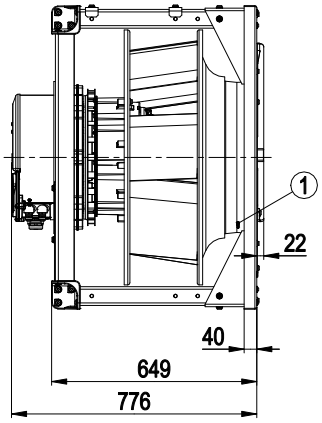

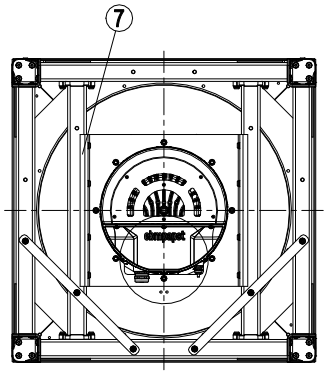

1	Inlet ring with pressure tap (k-factor: 545)
2	Mounting position for vibration-absorbing elements, tightening torque max. 20 Nm
3	Cable diameter min. 16 mm, max. 20.5 mm, tightening torque 6 ± 0.9 Nm
4	Cable diameter min. 5 mm, max. 13 mm, tightening torque 4 ± 0.6 Nm
5	Tightening torque 3.5 ± 0.5 Nm
6	Additional ground connection point. Tapping hole prepared for self-tapping M5 screw, max. screw-in depth 8 mm
7	Motor support structure
	Installation position: Only base mounting, shaft horizontal (the struts next to the motor support plate must be vertical!)
	The drawing is only for showing the dimensions. The views do not represent the possible installation positions.

ebm-papst Mulfingen GmbH & Co. KG · Bachmühle 2 · D-74673 Mulfingen · Phone +49 (0) 7938 81-0 · Fax +49 (0) 7938 81-110 ·sales@fansco.com · www.fansco.com

EC centrifugal module

backward-curved, single-intake
with cube design

Connection diagram

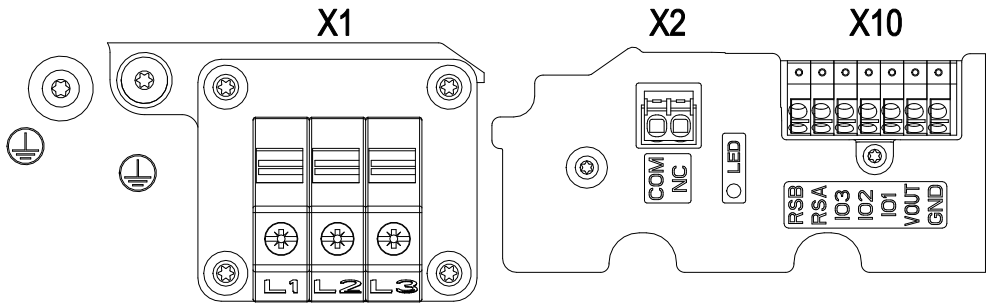

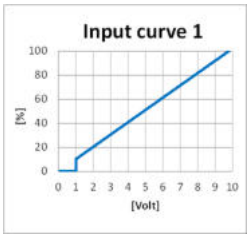

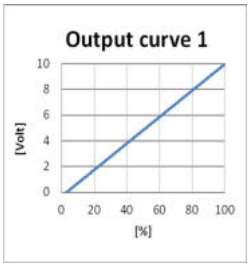

No.	Conn.	Designation	Function/assignment
X1	PWR	PE	Protective earth
X1	PWR	L1, L2, L3	Power supply, phase, see nameplate for voltage range
X2	CTRL	COM	Status relay, floating status contact, common connection, contact rating 250 VAC / 2 A (AC1) / min. 10 mA, reinforced insulation on supply side and on control interface side
X2	CTRL	NC	Status relay, floating status contact, break for failure
X10	CTRL	GND	Reference ground for control interface, SELV
X10	CTRL	Vout	Voltage output 3.3-24 VDC +/-5%, Pmax=800 mW, voltage parameterizable Factory setting: 10 VDC short-circuit-proof, supply for external devices, SELV alternatively: 15-50 VDC input for parameterization via MODBUS without line voltage
X10	CTRL	IO1	Factory setting: Analog input 0-10 V / PWM, Ri=100 kΩ, function: set value Characteristic curve parameterizable (see input characteristic curve "Input curve 1"), SELV Function parameterizable at the factory (see table Optional interface functions)
X10	CTRL	IO2	Factory setting: Digital input - high active, function: Disable input, SELV - inactive: Pin open or applied voltage < 1.5 VDC - active: applied voltage 3.5-50 VDC Reset function: Triggering of error reset on change of state from "enabled" to "disabled" function parameterizable (see table Optional interface functions)
X10	CTRL	IO3	Factory settings: Analog output 0-10 V, max. 5mA, function: Fan speed Characteristic curve parameterizable (see output characteristic curve "Output curve 1"), SELV Function parameterizable at the factory (see table Optional interface functions)
X10	CTRL	RSA	RS-485 interface for MODBUS RSA, SELV dielectric strength to MODBUS RSB +/-14 V, dielectric strength to GND +/-7 V
X10	CTRL	RSB	RS-485 interface for MODBUS RSB, SELV dielectric strength to MODBUS RSA +/-14 V, dielectric strength to GND +/-7 V
		LED	green: status = good, ready for operation orange: status = warning red: status = failure

ebm-papst Mulfingen GmbH & Co. KG · Bachmühle 2 · D-74673 Mulfingen · Phone +49 (0) 7938 81-0 · Fax +49 (0) 7938 81-110 ·sales@fansco.com · www.fansco.com

Terminal/plug assignment

Advanced (A1)

Functions and parameter description
MODBUS V7.1

○ *configurable function*
(○) *function to be activated via IO Mode*

	configurable IO mode	electrical specification	MODBUS Register for IO mode configuration	configurable IO functions: normal / inverse																			
				D101 [...]	D147 [...]	D104 [...]	D12E [...]	D148 [...]	D16C [...]	D16A [...]	D00C [1]	D638 [...]	selection direct via IO			D130 [4]	D61B	D130 [0]	D130 [1]	D130 [2]	D130 [5]	D145	
				source: set value	source: sensor value	switch: parameter set: #1 / #2	switch: control function: heating (pos.) /cooling (neg.)	switch: direction of rotation: cw / ccw	switch: set value source	switch: fan enable / disable	source: pulse input for auto-adressing	source: DCI input	signal: tach out	signal: diagnostics out	signal: alarm out	signal: pulse output for auto-adressing	signal: DCI out	signal: fan modulation level %	signal: actual speed 1/min	signal: system modulation level %	signal: remote control output 0-10 V	signal: run monitoring	signal: status
				INPUT													OUTPUT						
IO1	○ **Din1 (high active):** digital input	active: applied voltage 3.5 - 50 VDC not active: pin open or applied voltage < 1.5 VDC, SELV	D158 [0]			○	○	○	○	○	○	○											
IO1	○ **Din1 (low active):** digital input	active: applied voltage < 1.5 VDC not active: pin open or applied voltage 3.5 - 50 VDC, SELV	D158 [1]			○	○	○	○	○	○	○											
IO1	○ **Ain1 0-10 V/PWM:** analog input	Ri = 100 kΩ, characteristic curve parameterizable, f_{PWM} = 1k - 10 kHz, SELV	D158 [2]	○	○																		
IO1	○ **Ain1 0-10 V/PWM (with pull up):** analog input	Ri = 100 kΩ, characteristic curve parameterizable, f_{PWM} = 1k - 10 kHz, SELV	D158 [9]	○	○																		
IO2	○ **Din2 (high active):** digital input	active: applied voltage 3.5 - 50 VDC not active: pin open or applied voltage < 1.5 VDC, SELV	D159 [0]			○	○	○	○	○		○											
IO2	○ **Ain2 0-10 V/PWM:** analog input	Ri = 100 kΩ, characteristic curve parameterizable, f_{PWM} = 1k - 10 kHz, SELV	D159 [2]	○	○																		
IO2	○ **Ain2 4-20 mA:** analog input	Ri = 125 Ω, characteristic curve parameterizable, SELV	D159 [3]	○	○																		
IO2	○ **Tach out** (open collector)	Umax = 50 VDC, Imax = 20 mA, SELV	D159 [5]										(○)										
IO2	○ **Diagnostics out** (open collector)	Umax = 50 VDC, Imax = 20 mA, SELV	D159 [6]											(○)									
IO2	○ **Alarm out** (open collector)	Umax = 50 VDC, Imax = 20 mA, SELV	D159 [10]												(○)								
IO2	○ **Test pulse output addressing** (open collector)	Umax = 50 VDC, Imax = 20 mA, SELV	D159 [11]													(○)							
IO2	○ **DCI-output** (open collector)	Umax = 50 VDC, Imax = 20 mA, SELV	D159 [12]														(○)						
IO3	○ **Din3 (high active):** digital input	active: applied voltage 3.5 - 50 VDC not active: pin open or applied voltage < 1.5 VDC, SELV	D15A [0]			○	○	○	○	○		○											
IO3	○ **Din3 (low active):** digital input	active: applied voltage < 1.5 VDC not active: pin open or applied voltage 3.5 - 50 VDC, SELV	D15A [1]			○	○	○	○	○		○											
IO3	○ **PWMin3:** digital PWM input, idle level high	PWM = 40 Hz - 10 kHz, characteristics parameterizable active: pin open or applied voltage 3.5 - 50 VDC not active: applied voltage < 1.5 VDC, SELV	D15A [7]	○																			
IO3	○ **PWMin3:** digital PWM input, idle level low	PWM = 40 Hz - 10 kHz, characteristics parameterizable active: pin open or applied voltage 3.5 - 50 VDC not active: applied voltage < 1.5 VDC, SELV	D15A [8]	○																			
IO3	○ **Aout3 0-10 V:** analog input	function parameterizable, max. 5 mA, max output frequency 300 Hz, SELV	D15A [4]															○	○	○	○		
IO3	○ **Tach out** (pulses)	0-10 V max. 5 mA, max. output frequency 300 Hz, SELV	D15A [5]										(○)										
IO3	○ **Diagnostics out** (pulses)	0-10 V max. 5 mA, max. output frequency 300 Hz, SELV	D15A [6]											(○)									
IO3	○ **Alarm out** (pulses)	0-10 V max. 5 mA, max. output frequency 300 Hz, SELV	D15A [10]												(○)								
IO3	○ **Test pulse output addressing** (pulses)	0-10 V max. 5 mA, max. output frequency 300 Hz, SELV	D15A [11]													(○)							
IO3	○ **DCI output** (pulses)	0-10 V max. 5 mA, max. output frequency 300 Hz, SELV	D15A [12]														(○)						
RSA RSB	**RS485 bus connection**	MODBUS RTU, parameter specification V7.1, SELV		○		○	○	○	○	○													
COM NC	**Relay**	250 VAC / 2 A (AC1)																				○	○
Vout	**Voltage output**	Voltage parameterizable 3.3 - 24 VDC, SELV	D16E [...]																				
	Alternatively: Input auxillary power supply for parameterization via RS485/MODBUS RTU without line voltage	*15 - 50 VDC*																					

ebmpapst

ebm-papst Mulfingen GmbH & Co. KG · Bachmühle 2 · D-74673 Mulfingen · Phone +49 (0) 7938 81-0 · Fax +49 (0) 7938 81-110 ·sales@fansco.com · www.fansco.com

8300100182

VBF0710XTXNS

EC centrifugal module

backward-curved, single-intake

with cube design

Curves: Air performance 50 Hz

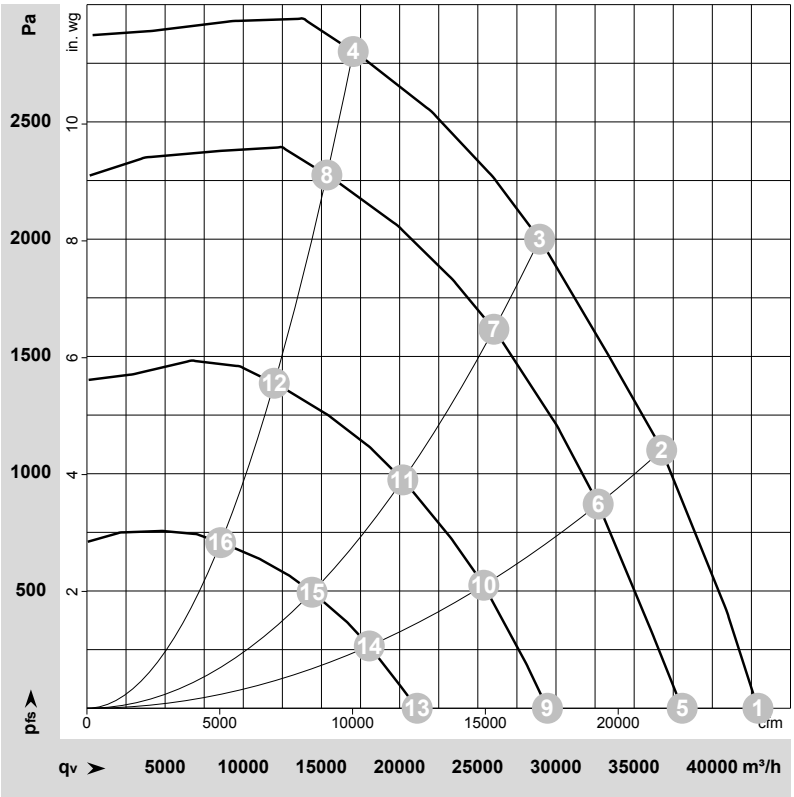

ρ = 1.15 kg/m³ ± 2 %

Measurement: LU-221698-1
Date: 2022-07-14
Nozzle: 71075-2-4013

Air performance measured according to ISO 5801 installation category A. For detailed information on the measurement setup, contact ebm-papst. Intake sound level: Sound power level according to ISO 13347 / sound pressure level measured at 1 m distance from fan axis. The values given are valid under the specified measuring conditions and may vary due to conditions of installation. For deviations from the standard configuration, the parameters have to be checked on the installed unit.

Measured values

	Wired	U	f	n	P_e	I	LpA_{in}	LwA_{in}	LwA_{out}	LwA	q_V	p_{fs}	q_V	p_{fs}
		V	Hz	min^{-1}	W	A	dB(A)	dB(A)	dB(A)	dB	m^3/h	Pa	cfm	in. wg
1	3~	400	50	2125	16180	26.09	94	104	107	108	42915	0	25260	0.00
2	3~	400	50	2125	21416	33.34	90	100	103	105	36760	1100	21635	4.42
3	3~	400	50	2125	24458	37.63	88	95	101	102	28955	2000	17040	8.03
4	3~	400	50	2125	22123	34.34	89	96	102	103	17030	2800	10025	11.24
5	3~	400	50	1915	11779	20.00	90	100	104	105	38075	0	22410	0.00
6	3~	400	50	1915	15561	25.78	88	97	101	102	32700	870	19245	3.49
7	3~	400	50	1910	17929	29.10	85	93	98	99	26025	1616	15320	6.49
8	3~	400	50	1910	16197	26.66	86	93	99	100	15345	2273	9030	9.13
9	3~	400	50	1490	5825	11.73	83	93	99	100	29455	0	17335	0.00
10	3~	400	50	1485	7610	14.12	80	89	94	95	25380	524	14940	2.10
11	3~	400	50	1485	8720	15.68	78	86	92	93	20205	974	11890	3.91
12	3~	400	50	1490	7962	14.61	79	86	92	93	11980	1386	7050	5.56
13	3~	400	50	1065	2361	6.15	73	83	86	88	21120	0	12430	0.00
14	3~	400	50	1060	2977	7.27	71	79	84	86	18060	266	10630	1.07
15	3~	400	50	1060	3377	8.00	70	77	83	84	14400	495	8475	1.99
16	3~	400	50	1060	3127	7.54	70	77	83	84	8555	706	5035	2.83

Wired = Wiring · U = Voltage · f = Frequency · n = Speed (rpm) · P_e = Power consumption · I = Current draw · LpA_{in} = Sound pressure level intake side · LwA_{in} = Sound power level intake side
LwA_{out} = Sound power level outlet side · q_V = Air flow · p_{fs} = Pressure increase

ebm-papst Mulfingen GmbH & Co. KG · Bachmühle 2 · D-74673 Mulfingen · Phone +49 (0) 7938 81-0 · Fax +49 (0) 7938 81-110 ·sales@fansco.com · www.fansco.com