8300100170

VBH0225RSLFS

EC centrifugal module - RadiCal

backward-curved, single-intake

with housing

ebm-papst Mulfingen GmbH & Co. KG
Bachmühle 2 · D-74673 Mulfingen
Phone +49 7938 81-0
Fax +49 7938 81-110
info1@de.fansco.com
www.fansco.com

Limited partnership · Headquarters Mulfingen
Amtsgericht (court of registration) Stuttgart · HRA 590344

General partner Elektrobau Mulfingen GmbH · Headquarters Mulfingen
Amtsgericht (court of registration) Stuttgart · HRB 590142

Nominal data

Item	**8300100170**
Motor	**E06003-30**

Phase		1~
Nominal voltage	VAC	230
Nominal voltage range	VAC	200 .. 240
Frequency	Hz	50/60
Method of obtaining data		ml
Speed (rpm)	min^{-1}	2850
Power consumption	W	170
Current draw	A	1.35
Min. ambient temperature	°C	-25
Max. ambient temperature	°C	60

ml = Max. load · me = Max. efficiency · fa = Free air · cs = Customer specification · ce = Customer equipment
Subject to change

Data according to Commission Regulation (EU) 327/2011 (prEN 17166)

		Actual	Req. 2015
01 Overall efficiency η_{es}	%	57.3	43.4
02 Measurement category		A	
03 Efficiency category		Static	
04 Efficiency grade N		75.9	62
05 Variable speed drive		Yes	

09 Power consumption P_{ed}	kW	0.17
09 Air flow q_v	m³/h	790
09 Pressure increase p_{fs}	Pa	391
10 Speed (rpm) n	min^{-1}	2840
11 Specific ratio*		1.00

Data obtained at optimum efficiency level.

* Specific ratio = 1 + p_{fs} / 100 000 Pa

LU-219150

The efficiency values displayed for achieving conformity with the Ecodesign Regulation EU 327/2011 has been reached with defined air duct components (e.g. inlet rings).
The dimensions must be requested from ebm-papst. If other air conduction geometries are used on the installation side, the ebm-papst evaluation loses its validity/the conformity must be confirmed again.

The product does not fall within the scope of Regulation (EU) 2019/1781 due to the exception specified in Article 2 (2a) (motors completely integrated into a product).

EC centrifugal module - RadiCal

backward-curved, single-intake
with housing

Technical description

Weight	2.32 kg
Size	225 mm
Motor size	60
Rotor surface	Thick-film passivated
Electronics housing material	Die-cast aluminum
Impeller material	PP plastic
Housing material	PA plastic
Number of blades	7
Direction of rotation	Clockwise, viewed toward rotor
Degree of protection	IP54
Insulation class	"B"
Moisture (F) / Environmental (H) protection class	H1
Max. permitted ambient temp. for motor (transport/storage)	+80 °C
Min. permitted ambient temp. for motor (transport/storage)	-40 °C
Installation position	Any
Condensation drainage holes	None, open rotor
Mode	S1
Motor bearing	Ball bearing
Technical features	- Output 10 VDC, max. 10 mA - Locked-rotor detection - Tach output - Speed control - Power limiter - Motor current limitation - Soft start - Control input 0-10 VDC / PWM - Control interface with SELV potential safely disconnected from the mains - Overvoltage detection - Thermal overload protection for electronics/motor - Line undervoltage detection
EMC immunity to interference	According to EN 61000-6-2 (industrial environment)
EMC interference emission	According to EN 61000-6-4 (industrial environment)
Touch current according to IEC 60990 (measuring circuit Fig. 4, TN system)	<= 3.5 mA
Motor protection	Electronic motor protection
With cable	Variable
Protection class assignment	I; If a protective earth is connected by the customer This component for installation may have several local protection classes. This information relates to this component's basic design. The final protection class is based on the component's intended installation and connection.
Conformity with standards	EN 60034-1; EN 60204-1; EN 60335-1; UKCA; CE
Approval	UL 1004-7 + 60730-1; CSA C22.2 No. 77 + CAN/CSA-E60730-1

ebm-papst Mulfingen GmbH & Co. KG · Bachmühle 2 · D-74673 Mulfingen · Phone +49 (0) 7938 81-0 · Fax +49 (0) 7938 81-110 · info1@de.fansco.com · www.fansco.com

EC centrifugal module - RadiCal

backward-curved, single-intake
with housing

Product drawing

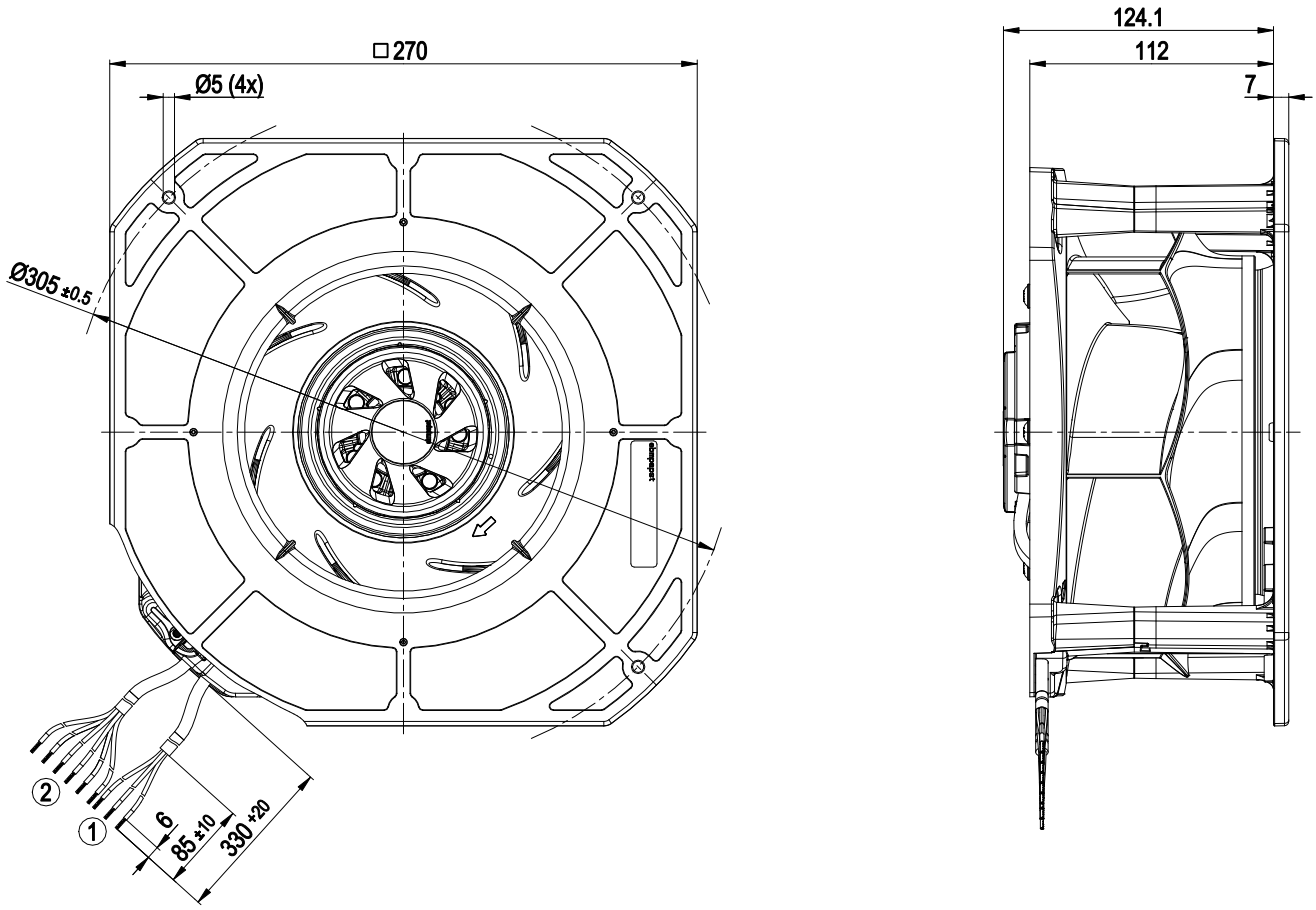

1	Supply line (PWR) PVC AWG20
	3x splice
2	Control wire (CTRL) PVC AWG22
	6x splice

ebm-papst Mulfingen GmbH & Co. KG · Bachmühle 2 · D-74673 Mulfingen · Phone +49 (0) 7938 81-0 · Fax +49 (0) 7938 81-110 · info1@de.fansco.com · www.fansco.com

Mounting dimensions

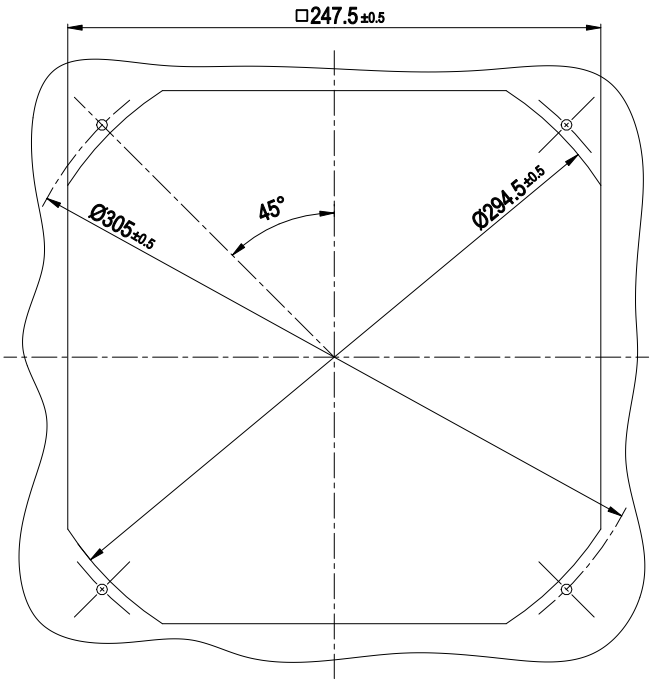

ebm-papst Mulfingen GmbH & Co. KG · Bachmühle 2 · D-74673 Mulfingen · Phone +49 (0) 7938 81-0 · Fax +49 (0) 7938 81-110 · info1@de.fansco.com · www.fansco.com

Connection diagram

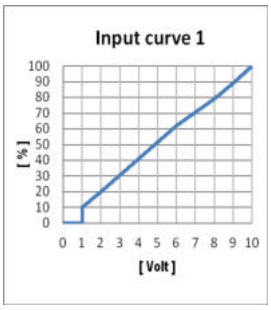

No.	Conn.	Designation	Color	Function/assignment
	PWR	L	black	Power supply, phase, see nameplate for voltage range
	PWR	N	blue	Power supply, neutral conductor, see nameplate for voltage range
	PWR	PE	green/yellow	Protective earth
	CTRL	GND	blue	Reference ground for control interface, SELV
	CTRL	IO1	yellow	Factory setting: Analog input 0-10 V/PWM, Ri=100 KΩ, fPWM=1 kHz..10 kHz, Function: Speed set value Characteristic curve parameterizable (see "Input curve 1"), SELV Function parameterizable at the factory (see Optional interface functions table)
	CTRL	IO2	white	Factory setting: Open collector output, Umax=50 VDC, Imax= 10 mA, function: Tach output 1 pulse/revolution, SELV Function parameterizable at factory (see table Optional interface functions)
	CTRL	Vout	red	Voltage output 10 VDC +/-3%, Imax=10 mA Short-circuit-proof, power supply for external devices, SELV
	CTRL	-	gray	No function
	CTRL	-	brown	No function

ebm-papst Mulfingen GmbH & Co. KG · Bachmühle 2 · D-74673 Mulfingen · Phone +49 (0) 7938 81-0 · Fax +49 (0) 7938 81-110 · info1@de.fansco.com · www.fansco.com

Terminal/plug assignment

Basic (B4)

Factory configuration option upon request

○ *Factory configuration option*

	configurable IO mode	electrical specification	INPUT				OUTPUT				
			source: set value	switch: parameter set: #1 / #2	switch: direction of rotation: cw / ccw	switch: enable/disable input	configurable function	signal: tach out	signal: diagnostics out	signal: alarm out	signal: run monitoring	signal: status	signal: configurable function
IO1	○ **Din1 (high active)**: digital input	active: parameterizable voltage x-30 VDC not active: pin open or parameterizable voltage <x VDC, SELV		○	○	○	○						
	○ **Ain1 0-10 V/PWM:** analog input	Ri = 100 kΩ, characteristic curve parameterizable, f_{PWM} = 1k..10 kHz, SELV	○										
IO2	○ **Tach out** (open collector)	Umax=50 VDC, Imax=10 mA, SELV						○					
	○ **Diagnostics out** (open collector)	Umax=50 VDC, Imax=10 mA, SELV							○				
	○ **Alarm out** (open collector)	Umax=50 VDC, Imax=10 mA, SELV								○			
	○ **Open collector**	Umax=50 VDC, Imax=10 mA, SELV									○	○	○
Vout	Voltage output	Voltage10 VDC, SELV											

ebm-papst Mulfingen GmbH & Co. KG · Bachmühle 2 · D-74673 Mulfingen · Phone +49 (0) 7938 81-0 · Fax +49 (0) 7938 81-110 · info1@de.fansco.com · www.fansco.com

8300100170

VBH0225RSLFS

EC centrifugal module - RadiCal

backward-curved, single-intake

with housing

Curves: Air performance 50 Hz

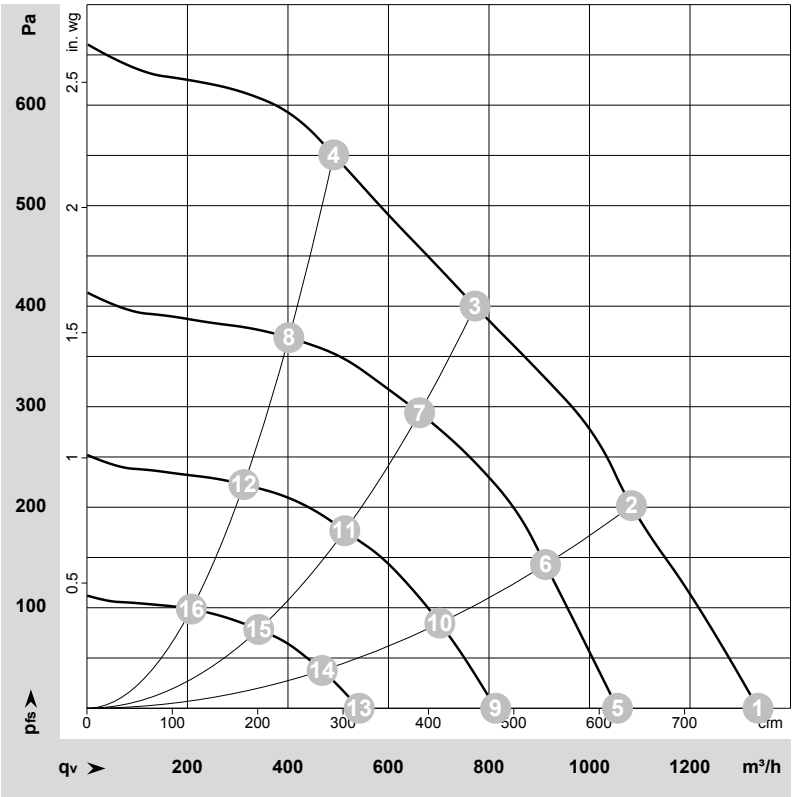

ρ = 1.15 kg/m³ ± 2 %

Measurement: LU-219150-1

Air performance measured according to ISO 5801 installation category A. For detailed information on the measurement setup, contact ebm-papst. Intake sound level: Sound power level according to ISO 13347 / sound pressure level measured at 1 m distance from fan axis. The values given are valid under the specified measuring conditions and may vary due to conditions of installation. For deviations from the standard configuration, the parameters have to be checked on the installed unit.

Measured values

	Wired	U	f	n	P_e	I	LpA_{in}	LwA_{in}	q_V	p_{fs}	q_V	p_{fs}
		V	Hz	min^{-1}	W	A	dB(A)	dB(A)	m^3/h	Pa	cfm	in. wg
1	1~	230	50	3080	163	1.29	71	79	1335	0	785	0.00
2	1~	230	50	2895	170	1.35	66	74	1085	200	640	0.80
3	1~	230	50	2850	170	1.35	61	69	770	400	455	1.61
4	1~	230	50	2970	170	1.35	65	74	490	550	290	2.21
5	1~	230	50	2445	84	0.71			1055	0	620	0.00
6	1~	230	50	2445	104	0.87			910	143	535	0.57
7	1~	230	50	2445	109	0.91			660	294	390	1.18
8	1~	230	50	2450	96	0.81			400	369	235	1.48
9	1~	230	50	1905	43	0.37			815	0	480	0.00
10	1~	230	50	1910	52	0.45			700	85	415	0.34
11	1~	230	50	1910	53	0.46			515	177	300	0.71
12	1~	230	50	1905	48	0.42			310	223	185	0.90
13	1~	230	50	1275	15	0.15			540	0	320	0.00
14	1~	230	50	1275	18	0.17			470	38	275	0.15
15	1~	230	50	1275	19	0.17			340	78	200	0.31
16	1~	230	50	1275	17	0.16			210	99	120	0.40

Wired = Wiring · U = Voltage · f = Frequency · n = Speed (rpm) · P_e = Power consumption · I = Current draw · LpA_{in} = Sound pressure level intake side · LwA_{in} = Sound power level intake side
q_V = Air flow · p_{fs} = Pressure increase

ebm-papst Mulfingen GmbH & Co. KG · Bachmühle 2 · D-74673 Mulfingen · Phone +49 (0) 7938 81-0 · Fax +49 (0) 7938 81-110 · info1@de.fansco.com · www.fansco.com